A **CRC PRESS** FREEBOOK

Engineering Mathematics
with John Bird FreeBook

CRC Press
Taylor & Francis Group

TABLE OF CONTENTS

Introduction

01: Higher Engineering Mathematics 8th Ed,

- Chapter: **Algebra**

02: Engineering Mathematics 8th Ed,

- Chapter: **Solving quadratic equations**

03: Higher Engineering Mathematics 8th Ed,

- Chapter: **Trigonometric waveforms**

04: Basic Engineering Mathematics 7th Ed,

- Chapter: **Binary, octal and hexadecimal numbers**

05: Higher Engineering Mathematics 8th Ed,

- Chapter: **Applications of integration**

Take a look at the titles included in this FreeBook:

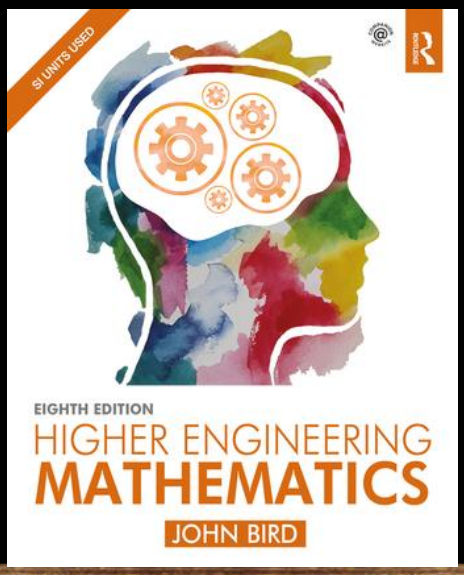

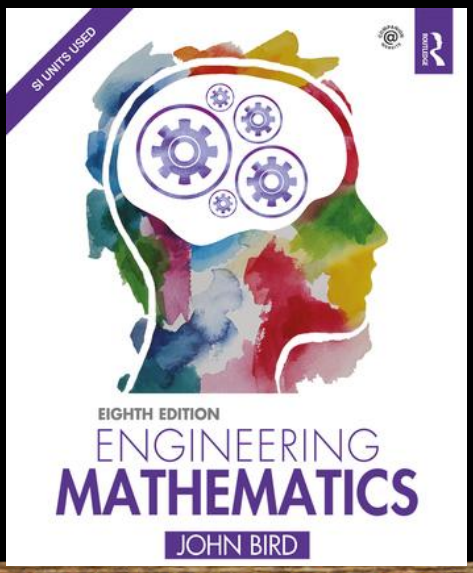

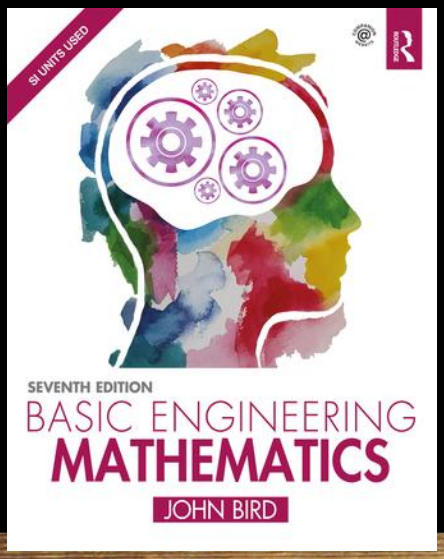

To discover more of our engineering mathematics titles visit our website here:

https://www.routledge.com/products/SCEC2520

Introduction

Mathematics.....

A career in any engineering or scientific field will require both basic and advanced mathematics. Without mathematics to determine principles, calculate dimensions and limits, explore variations, prove concepts, and so on, there would be no mobile telephones, televisions, stereo systems, video games, microwave ovens, computers, or virtually anything electronic. There would be no bridges, tunnels, roads, skyscrapers, automobiles, ships, planes, rockets or most things mechanical. There would be no metals beyond the common ones, such as iron and copper, no plastics, no synthetics. In fact, society would most certainly be less advanced without the use of mathematics throughout the centuries and into the future.

It is these thoughts that drive me to want to write more understandable and useful engineering mathematics texts to help potential electrical, mechanical, aerospace, nuclear, petroleum, industrial, environmental and civil engineers. Recent publications of 'Basic Engineering Mathematics' (7th edition), 'Engineering Mathematics' (8th edition) and 'Higher Engineering Mathematics' (8th edition), between them contain some 185 chapters. The five chapters reproduced in this document are therefore but a fleeting glance of the whole picture – but sufficient I hope to whet the appetite! The formats of all the chapters in the texts are similar to these.

You must visit the website.....

If you haven't already, try visiting the website:
www.routledge.com/cw/bird

Here you will a number of books. Click on, for example, 'Higher Engineering Mathematics 8th Ed'. Then click on 'Menu', then on 'Students', then on 'Exercise Solutions', then 'Download', (it may a few seconds). Then you have access to the solutions for all 2000 questions set within the 277 Exercises that occur every few pages in the textbook.

This free resource is available for all of the textbooks on the website

01: Higher Engineering Mathematics, 8th Edition,

- Chapter: **Algebra**

Chapter 1

Algebra

Why it is important to understand: **Algebra, polynomial division and the factor and remainder theorems**

It is probably true to say that there is no branch of engineering, physics, economics, chemistry or computer science which does not require the understanding of the basic laws of algebra, the laws of indices, the manipulation of brackets, the ability to factorise and the laws of precedence. This then leads to the ability to solve simple, simultaneous and quadratic equations which occur so often. The study of algebra also revolves around using and manipulating polynomials. Polynomials are used in engineering, computer programming, software engineering, in management, and in business. Mathematicians, statisticians and engineers of all sciences employ the use of polynomials to solve problems; among them are aerospace engineers, chemical engineers, civil engineers, electrical engineers, environmental engineers, industrial engineers, materials engineers, mechanical engineers and nuclear engineers. The factor and remainder theorems are also employed in engineering software and electronic mathematical applications, through which polynomials of higher degrees and longer arithmetic structures are divided without any complexity. The study of algebra, equations, polynomial division and the factor and remainder theorems is therefore of some considerable importance in engineering.

At the end of this chapter, you should be able to:

- understand and apply the laws of indices
- understand brackets, factorisation and precedence
- transpose formulae and solve simple, simultaneous and quadratic equations
- divide algebraic expressions using polynomial division
- factorise expressions using the factor theorem
- use the remainder theorem to factorise algebraic expressions

1.1 Introduction

In this chapter, polynomial division and the factor and remainder theorems are explained (in Sections 1.4 to 1.6). However, before this, some essential algebra revision on basic laws and equations is included.
For further algebra revision, go to the website:
www.routledge.com/cw/bird

1.2 Revision of basic laws

(a) Basic operations and laws of indices

The **laws of indices** are:

(i) $a^m \times a^n = a^{m+n}$ (ii) $\dfrac{a^m}{a^n} = a^{m-n}$

(iii) $(a^m)^n = a^{m \times n}$ (iv) $a^{\frac{m}{n}} = \sqrt[n]{a^m}$

(v) $a^{-n} = \dfrac{1}{a^n}$ (vi) $a^0 = 1$

Higher Engineering Mathematics. 978-1-138-67357-1, © 2017 John Bird. Published by Taylor & Francis. All rights reserved.

Problem 1. Evaluate $4a^2bc^3 - 2ac$ when $a = 2$, $b = \frac{1}{2}$ and $c = 1\frac{1}{2}$

$$4a^2bc^3 - 2ac = 4(2)^2\left(\frac{1}{2}\right)\left(\frac{3}{2}\right)^3 - 2(2)\left(\frac{3}{2}\right)$$

$$= \frac{4 \times 2 \times 2 \times 3 \times 3 \times 3}{2 \times 2 \times 2 \times 2} - \frac{12}{2}$$

$$= 27 - 6 = \mathbf{21}$$

Problem 2. Multiply $3x + 2y$ by $x - y$

$$\begin{array}{rl} & 3x + 2y \\ & x - y \\ \hline \text{Multiply by } x \rightarrow & 3x^2 + 2xy \\ \text{Multiply by } -y \rightarrow & \quad -3xy - 2y^2 \\ \hline \text{Adding gives:} & \mathbf{3x^2 - xy - 2y^2} \end{array}$$

Alternatively,

$$(3x + 2y)(x - y) = 3x^2 - 3xy + 2xy - 2y^2$$

$$= \mathbf{3x^2 - xy - 2y^2}$$

Problem 3. Simplify $\dfrac{a^3b^2c^4}{abc^{-2}}$ and evaluate when $a = 3$, $b = \frac{1}{8}$ and $c = 2$

$$\frac{a^3b^2c^4}{abc^{-2}} = a^{3-1}b^{2-1}c^{4-(-2)} = \mathbf{a^2bc^6}$$

When $a = 3$, $b = \frac{1}{8}$ and $c = 2$,

$$a^2bc^6 = (3)^2\left(\tfrac{1}{8}\right)(2)^6 = (9)\left(\tfrac{1}{8}\right)(64) = \mathbf{72}$$

Problem 4. Simplify $\dfrac{x^2y^3 + xy^2}{xy}$

$$\frac{x^2y^3 + xy^2}{xy} = \frac{x^2y^3}{xy} + \frac{xy^2}{xy}$$

$$= x^{2-1}y^{3-1} + x^{1-1}y^{2-1}$$

$$= \mathbf{xy^2 + y} \quad \text{or} \quad \mathbf{y(xy + 1)}$$

Problem 5. Simplify $\dfrac{(x^2\sqrt{y})(\sqrt{x}\sqrt[3]{y^2})}{(x^5y^3)^{\frac{1}{2}}}$

$$\frac{(x^2\sqrt{y})(\sqrt{x}\sqrt[3]{y^2})}{(x^5y^3)^{\frac{1}{2}}} = \frac{x^2y^{\frac{1}{2}}x^{\frac{1}{2}}y^{\frac{2}{3}}}{x^{\frac{5}{2}}y^{\frac{3}{2}}}$$

$$= x^{2+\frac{1}{2}-\frac{5}{2}}y^{\frac{1}{2}+\frac{2}{3}-\frac{3}{2}}$$

$$= x^0y^{-\frac{1}{3}}$$

$$= \mathbf{y^{-\frac{1}{3}}} \quad \text{or} \quad \frac{\mathbf{1}}{\mathbf{y^{\frac{1}{3}}}} \quad \text{or} \quad \frac{\mathbf{1}}{\mathbf{\sqrt[3]{y}}}$$

Now try the following Practice Exercise

Practice Exercise 1 Basic algebraic operations and laws of indices (Answers on page 856)

1. Evaluate $2ab + 3bc - abc$ when $a = 2$, $b = -2$ and $c = 4$
2. Find the value of $5pq^2r^3$ when $p = \frac{2}{5}$, $q = -2$ and $r = -1$
3. From $4x - 3y + 2z$ subtract $x + 2y - 3z$.
4. Multiply $2a - 5b + c$ by $3a + b$
5. Simplify $(x^2y^3z)(x^3yz^2)$ and evaluate when $x = \frac{1}{2}$, $y = 2$ and $z = 3$
6. Evaluate $(a^{\frac{3}{2}}bc^{-3})(a^{\frac{1}{2}}b^{-\frac{1}{2}}c)$ when $a = 3$, $b = 4$ and $c = 2$
7. Simplify $\dfrac{a^2b + a^3b}{a^2b^2}$
8. Simplify $\dfrac{(a^3b^{\frac{1}{2}}c^{-\frac{1}{2}})(ab)^{\frac{1}{3}}}{(\sqrt{a^3}\sqrt{b}\,c)}$

(b) Brackets, factorisation and precedence

Problem 6. Simplify $a^2 - (2a - ab) - a(3b + a)$

$$a^2 - (2a - ab) - a(3b + a)$$

$$= a^2 - 2a + ab - 3ab - a^2$$

$$= \mathbf{-2a - 2ab} \quad \text{or} \quad \mathbf{-2a(1 + b)}$$

Problem 7. Remove the brackets and simplify the expression:

$$2a - [3\{2(4a - b) - 5(a + 2b)\} + 4a]$$

Removing the innermost brackets gives:

$$2a - [3\{8a - 2b - 5a - 10b\} + 4a]$$

Collecting together similar terms gives:

$$2a - [3\{3a - 12b\} + 4a]$$

Removing the 'curly' brackets gives:

$$2a - [9a - 36b + 4a]$$

Collecting together similar terms gives:

$$2a - [13a - 36b]$$

Removing the square brackets gives:

$$2a - 13a + 36b = \mathbf{-11a + 36b} \quad \text{or} \quad \mathbf{36b - 11a}$$

Problem 8. Factorise (a) $xy - 3xz$ (b) $4a^2 + 16ab^3$ (c) $3a^2b - 6ab^2 + 15ab$

(a) $xy - 3xz = \mathbf{x(y - 3z)}$

(b) $4a^2 + 16ab^3 = \mathbf{4a(a + 4b^3)}$

(c) $3a^2b - 6ab^2 + 15ab = \mathbf{3ab(a - 2b + 5)}$

Problem 9. Simplify $3c + 2c \times 4c + c \div 5c - 8c$

The order of precedence is division, multiplication, addition, and subtraction (sometimes remembered by BODMAS). Hence

$$\begin{aligned} &3c + 2c \times 4c + c \div 5c - 8c \\ &= 3c + 2c \times 4c + \left(\frac{c}{5c}\right) - 8c \\ &= 3c + 8c^2 + \frac{1}{5} - 8c \\ &= \mathbf{8c^2 - 5c + \frac{1}{5}} \quad \text{or} \quad \mathbf{c(8c - 5) + \frac{1}{5}} \end{aligned}$$

Problem 10. Simplify $(2a - 3) \div 4a + 5 \times 6 - 3a$

$$\begin{aligned} &(2a - 3) \div 4a + 5 \times 6 - 3a \\ &= \frac{2a - 3}{4a} + 5 \times 6 - 3a \\ &= \frac{2a - 3}{4a} + 30 - 3a \\ &= \frac{2a}{4a} - \frac{3}{4a} + 30 - 3a \\ &= \frac{1}{2} - \frac{3}{4a} + 30 - 3a = \mathbf{30\frac{1}{2} - \frac{3}{4a} - 3a} \end{aligned}$$

Now try the following Practice Exercise

Practice Exercise 2 Brackets, factorisation and precedence (Answers on page 856)

1. Simplify $2(p + 3q - r) - 4(r - q + 2p) + p$
2. Expand and simplify $(x + y)(x - 2y)$
3. Remove the brackets and simplify: $24p - [2\{3(5p - q) - 2(p + 2q)\} + 3q]$
4. Factorise $21a^2b^2 - 28ab$
5. Factorise $2xy^2 + 6x^2y + 8x^3y$
6. Simplify $2y + 4 \div 6y + 3 \times 4 - 5y$
7. Simplify $3 \div y + 2 \div y - 1$
8. Simplify $a^2 - 3ab \times 2a \div 6b + ab$

1.3 Revision of equations

(a) Simple equations

Problem 11. Solve $4 - 3x = 2x - 11$

Since $4 - 3x = 2x - 11$ then $4 + 11 = 2x + 3x$

i.e. $15 = 5x$ from which, $\boldsymbol{x = \frac{15}{5} = 3}$

Problem 12. Solve

$$4(2a - 3) - 2(a - 4) = 3(a - 3) - 1$$

Removing the brackets gives:

$$8a - 12 - 2a + 8 = 3a - 9 - 1$$

Rearranging gives:

$$8a - 2a - 3a = -9 - 1 + 12 - 8$$

i.e. $3a = -6$

and $\boldsymbol{a = \frac{-6}{3} = -2}$

Problem 13. Solve $\frac{3}{x-2} = \frac{4}{3x+4}$

By 'cross-multiplying': $3(3x+4) = 4(x-2)$

Removing brackets gives: $9x + 12 = 4x - 8$

Rearranging gives: $9x - 4x = -8 - 12$

i.e. $5x = -20$

and $\boldsymbol{x = \frac{-20}{5} = -4}$

Problem 14. Solve $\left(\frac{\sqrt{t}+3}{\sqrt{t}}\right) = 2$

$$\sqrt{t}\left(\frac{\sqrt{t}+3}{\sqrt{t}}\right) = 2\sqrt{t}$$

i.e. $\sqrt{t} + 3 = 2\sqrt{t}$

and $3 = 2\sqrt{t} - \sqrt{t}$

i.e. $3 = \sqrt{t}$

and $\boldsymbol{9 = t}$

(c) Transposition of formulae

Problem 15. Transpose the formula $v = u + \frac{ft}{m}$ to make f the subject.

$u + \frac{ft}{m} = v$ from which, $\frac{ft}{m} = v - u$

and $m\left(\frac{ft}{m}\right) = m(v-u)$

i.e. $ft = m(v-u)$

and $\boldsymbol{f = \frac{m}{t}(v-u)}$

Problem 16. The impedance of an a.c. circuit is given by $Z = \sqrt{R^2 + X^2}$. Make the reactance X the subject.

$\sqrt{R^2 + X^2} = Z$ and squaring both sides gives

$R^2 + X^2 = Z^2$, from which,

$X^2 = Z^2 - R^2$ and $\boldsymbol{\text{reactance } X = \sqrt{Z^2 - R^2}}$

Problem 17. Given that $\frac{D}{d} = \sqrt{\left(\frac{f+p}{f-p}\right)}$ express p in terms of D, d and f.

Rearranging gives: $\sqrt{\left(\frac{f+p}{f-p}\right)} = \frac{D}{d}$

Squaring both sides gives: $\frac{f+p}{f-p} = \frac{D^2}{d^2}$

'Cross-multiplying' gives:

$$d^2(f+p) = D^2(f-p)$$

Removing brackets gives:

$$d^2 f + d^2 p = D^2 f - D^2 p$$

Rearranging gives: $d^2 p + D^2 p = D^2 f - d^2 f$

Factorising gives: $p(d^2 + D^2) = f(D^2 - d^2)$

and $\boldsymbol{p = \frac{f(D^2 - d^2)}{(d^2 + D^2)}}$

Now try the following Practice Exercise

Practice Exercise 3 Simple equations and transposition of formulae (Answers on page 856)

In problems 1 to 4 solve the equations

1. $3x - 2 - 5x = 2x - 4$
2. $8 + 4(x-1) - 5(x-3) = 2(5-2x)$
3. $\frac{1}{3a-2} + \frac{1}{5a+3} = 0$
4. $\frac{3\sqrt{t}}{1-\sqrt{t}} = -6$
5. Transpose $y = \frac{3(F-f)}{L}$ for f

6. Make l the subject of $t = 2\pi\sqrt{\dfrac{l}{g}}$
7. Transpose $m = \dfrac{\mu L}{L + rCR}$ for L
8. Make r the subject of the formula $\dfrac{x}{y} = \dfrac{1+r^2}{1-r^2}$

(d) Simultaneous equations

Problem 18. Solve the simultaneous equations:

$$7x - 2y = 26 \quad (1)$$

$$6x + 5y = 29 \quad (2)$$

$5 \times$ equation (1) gives:

$$35x - 10y = 130 \quad (3)$$

$2 \times$ equation (2) gives:

$$12x + 10y = 58 \quad (4)$$

Equation (3) + equation (4) gives:

$$47x + 0 = 188$$

from which, $\boldsymbol{x = \dfrac{188}{47} = 4}$

Substituting $x = 4$ in equation (1) gives:

$$28 - 2y = 26$$

from which, $28 - 26 = 2y$ and $\boldsymbol{y = 1}$

Problem 19. Solve

$$\frac{x}{8} + \frac{5}{2} = y \quad (1)$$

$$11 + \frac{y}{3} = 3x \quad (2)$$

$8 \times$ equation (1) gives: $x + 20 = 8y$ (3)

$3 \times$ equation (2) gives: $33 + y = 9x$ (4)

i.e. $x - 8y = -20$ (5)

and $9x - y = 33$ (6)

$8 \times$ equation (6) gives: $72x - 8y = 264$ (7)

Equation (7) − equation (5) gives:

$$71x = 284$$

from which, $\boldsymbol{x = \dfrac{284}{71} = 4}$

Substituting $x = 4$ in equation (5) gives:

$$4 - 8y = -20$$

from which, $4 + 20 = 8y$ and $\boldsymbol{y = 3}$

(e) Quadratic equations

Problem 20. Solve the following equations by factorisation:

(a) $3x^2 - 11x - 4 = 0$

(b) $4x^2 + 8x + 3 = 0$

(a) The factors of $3x^2$ are $3x$ and x and these are placed in brackets thus:

$(3x \quad)(x \quad)$

The factors of -4 are $+1$ and -4 or -1 and $+4$, or -2 and $+2$. Remembering that the product of the two inner terms added to the product of the two outer terms must equal $-11x$, the only combination to give this is $+1$ and -4, i.e.,

$$3x^2 - 11x - 4 = (3x + 1)(x - 4)$$

Thus $(3x + 1)(x - 4) = 0$ hence

either $(3x + 1) = 0$ i.e. $\boldsymbol{x = -\dfrac{1}{3}}$

or $(x - 4) = 0$ i.e. $\boldsymbol{x = 4}$

(b) $4x^2 + 8x + 3 = (2x + 3)(2x + 1)$

Thus $(2x + 3)(2x + 1) = 0$ hence

either $(2x + 3) = 0$ i.e. $\boldsymbol{x = -\dfrac{3}{2}}$

or $(2x + 1) = 0$ i.e. $\boldsymbol{x = -\dfrac{1}{2}}$

Problem 21. The roots of a quadratic equation are $\frac{1}{3}$ and -2. Determine the equation in x.

If $\frac{1}{3}$ and -2 are the roots of a quadratic equation then,

$$(x - \tfrac{1}{3})(x + 2) = 0$$

i.e. $x^2 + 2x - \dfrac{1}{3}x - \dfrac{2}{3} = 0$

i.e. $x^2 + \dfrac{5}{3}x - \dfrac{2}{3} = 0$

or $\boldsymbol{3x^2 + 5x - 2 = 0}$

Problem 22. Solve $4x^2 + 7x + 2 = 0$ giving the answer correct to 2 decimal places.

From the quadratic formula if $ax^2+bx+c=0$ then,

$$x=\frac{-b\pm\sqrt{b^2-4ac}}{2a}$$

Hence if $4x^2+7x+2=0$

then $x=\dfrac{-7\pm\sqrt{7^2-4(4)(2)}}{2(4)}$

$$=\frac{-7\pm\sqrt{17}}{8}$$

$$=\frac{-7\pm4.123}{8}$$

$$=\frac{-7+4.123}{8}\text{ or }\frac{-7-4.123}{8}$$

i.e. $\boldsymbol{x=-0.36}$ or $\boldsymbol{-1.39}$

Now try the following Practice Exercise

Practice Exercise 4 Simultaneous and quadratic equations (Answers on page 856)

In problems 1 to 3, solve the simultaneous equations

1. $8x-3y=51$

   $3x+4y=14$

2. $5a=1-3b$

   $2b+a+4=0$

3. $\dfrac{x}{5}+\dfrac{2y}{3}=\dfrac{49}{15}$

   $\dfrac{3x}{7}-\dfrac{y}{2}+\dfrac{5}{7}=0$

4. Solve the following quadratic equations by factorisation:

   (a) $x^2+4x-32=0$

   (b) $8x^2+2x-15=0$

5. Determine the quadratic equation in x whose roots are 2 and -5

6. Solve the following quadratic equations, correct to 3 decimal places:

   (a) $2x^2+5x-4=0$

   (b) $4t^2-11t+3=0$

1.4 Polynomial division

Before looking at long division in algebra let us revise long division with numbers (we may have forgotten, since calculators do the job for us!).

For example, $\dfrac{208}{16}$ is achieved as follows:

$$\begin{array}{r} 13 \\ 16\overline{)\,208} \\ \underline{16} \\ 48 \\ \underline{48} \\ \cdot\cdot \\ \hline \end{array}$$

(1) 16 divided into 2 won't go

(2) 16 divided into 20 goes 1

(3) Put 1 above the zero

(4) Multiply 16 by 1 giving 16

(5) Subtract 16 from 20 giving 4

(6) Bring down the 8

(7) 16 divided into 48 goes 3 times

(8) Put the 3 above the 8

(9) $3\times16=48$

(10) $48-48=0$

Hence $\dfrac{208}{16}=\mathbf{13}$ exactly

Similarly, $\dfrac{172}{15}$ is laid out as follows:

$$\begin{array}{r} 11 \\ 15\overline{)\,172} \\ \underline{15} \\ 22 \\ \underline{15} \\ 7 \\ \hline \end{array}$$

Hence $\dfrac{172}{15}=11$ remainder 7 or $11+\dfrac{7}{15}=\mathbf{11\dfrac{7}{15}}$

Below are some examples of division in algebra, which in some respects is similar to long division with numbers.

(Note that a **polynomial** is an expression of the form

$$f(x)=a+bx+cx^2+dx^3+\cdots$$

and **polynomial division** is sometimes required when resolving into partial fractions – see Chapter 2.)

Problem 23. Divide $2x^2 + x - 3$ by $x - 1$

$2x^2 + x - 3$ is called the **dividend** and $x - 1$ the **divisor**. The usual layout is shown below with the dividend and divisor both arranged in descending powers of the symbols.

$$\begin{array}{r|l} & 2x + 3 \\ \hline x - 1 & 2x^2 + x - 3 \\ & \underline{2x^2 - 2x} \\ & \quad 3x - 3 \\ & \quad \underline{3x - 3} \\ & \quad \cdot \quad \cdot \end{array}$$

Dividing the first term of the dividend by the first term of the divisor, i.e. $\frac{2x^2}{x}$ gives $2x$, which is put above the first term of the dividend as shown. The divisor is then multiplied by $2x$, i.e. $2x(x-1) = 2x^2 - 2x$, which is placed under the dividend as shown. Subtracting gives $3x - 3$. The process is then repeated, i.e. the first term of the divisor, x, is divided into $3x$, giving $+3$, which is placed above the dividend as shown. Then $3(x-1) = 3x - 3$, which is placed under the $3x - 3$. The remainder, on subtraction, is zero, which completes the process.

Thus $\mathbf{(2x^2 + x - 3) \div (x - 1) = (2x + 3)}$

[A check can be made on this answer by multiplying $(2x + 3)$ by $(x - 1)$ which equals $2x^2 + x - 3$.]

Problem 24. Divide $3x^3 + x^2 + 3x + 5$ by $x + 1$

$$\begin{array}{r|l} & (1) \quad (4) \quad (7) \\ & 3x^2 - 2x + 5 \\ \hline x + 1 & 3x^3 + x^2 + 3x + 5 \\ & \underline{3x^3 + 3x^2} \\ & \quad -2x^2 + 3x + 5 \\ & \quad \underline{-2x^2 - 2x} \\ & \qquad 5x + 5 \\ & \qquad \underline{5x + 5} \\ & \qquad \cdot \quad \cdot \end{array}$$

(1) x into $3x^3$ goes $3x^2$. Put $3x^2$ above $3x^3$

(2) $3x^2(x + 1) = 3x^3 + 3x^2$

(3) Subtract

(4) x into $-2x^2$ goes $-2x$. Put $-2x$ above the dividend

(5) $-2x(x + 1) = -2x^2 - 2x$

(6) Subtract

(7) x into $5x$ goes 5. Put 5 above the dividend

(8) $5(x + 1) = 5x + 5$

(9) Subtract

Thus $\dfrac{3x^3 + x^2 + 3x + 5}{x + 1} = \mathbf{3x^2 - 2x + 5}$

Problem 25. Simplify $\dfrac{x^3 + y^3}{x + y}$

$$\begin{array}{r|l} & (1) \quad (4) \quad (7) \\ & x^2 - xy + y^2 \\ \hline x + y & x^3 + 0 + 0 + y^3 \\ & \underline{x^3 + x^2y} \\ & \quad -x^2y \qquad + y^3 \\ & \quad \underline{-x^2y - xy^2} \\ & \qquad xy^2 + y^3 \\ & \qquad \underline{xy^2 + y^3} \\ & \qquad \cdot \quad \cdot \end{array}$$

(1) x into x^3 goes x^2. Put x^2 above x^3 of dividend

(2) $x^2(x + y) = x^3 + x^2y$

(3) Subtract

(4) x into $-x^2y$ goes $-xy$. Put $-xy$ above dividend

(5) $-xy(x + y) = -x^2y - xy^2$

(6) Subtract

(7) x into xy^2 goes y^2. Put y^2 above dividend

(8) $y^2(x + y) = xy^2 + y^3$

(9) Subtract

Thus

$$\frac{x^3 + y^3}{x + y} = \mathbf{x^2 - xy + y^2}$$

The zeros shown in the dividend are not normally shown, but are included to clarify the subtraction process and to keep similar terms in their respective columns.

Problem 26. Divide (x^2+3x-2) by $(x-2)$

$$
\begin{array}{r}
x\ +5 \\
x-2\ \overline{)\ x^2+3x-\ 2} \\
\underline{x^2-2x\ \ \ } \\
5x-\ 2 \\
\underline{5x-10} \\
8
\end{array}
$$

Hence

$$\frac{x^2+3x-2}{x-2} = \boldsymbol{x+5+\frac{8}{x-2}}$$

Problem 27. Divide $4a^3-6a^2b+5b^3$ by $2a-b$

$$
\begin{array}{r}
2a^2-2ab-\ b^2 \\
2a-b\ \overline{)\ 4a^3-6a^2b\ \ \ \ \ \ +5b^3} \\
\underline{4a^3-2a^2b\ \ \ \ \ \ \ \ \ \ } \\
-4a^2b\ \ \ \ \ \ +5b^3 \\
\underline{-4a^2b+2ab^2\ \ \ \ \ } \\
-2ab^2+5b^3 \\
\underline{-2ab^2+\ b^3} \\
4b^3
\end{array}
$$

Thus

$$\frac{4a^3-6a^2b+5b^3}{2a-b} = \boldsymbol{2a^2-2ab-b^2+\frac{4b^3}{2a-b}}$$

Now try the following Practice Exercise

Practice Exercise 5 Polynomial division (Answers on page 856)

1. Divide $(2x^2+xy-y^2)$ by $(x+y)$
2. Divide $(3x^2+5x-2)$ by $(x+2)$
3. Determine $(10x^2+11x-6)\div(2x+3)$
4. Find $\dfrac{14x^2-19x-3}{2x-3}$
5. Divide $(x^3+3x^2y+3xy^2+y^3)$ by $(x+y)$
6. Find $(5x^2-x+4)\div(x-1)$
7. Divide $(3x^3+2x^2-5x+4)$ by $(x+2)$
8. Determine $(5x^4+3x^3-2x+1)/(x-3)$

1.5 The factor theorem

There is a simple relationship between the factors of a quadratic expression and the roots of the equation obtained by equating the expression to zero.

For example, consider the quadratic equation $x^2+2x-8=0$

To solve this we may factorise the quadratic expression x^2+2x-8 giving $(x-2)(x+4)$

Hence $(x-2)(x+4)=0$

Then, if the product of two numbers is zero, one or both of those numbers must equal zero. Therefore,

either $(x-2)=0$, from which, $x=2$

or $(x+4)=0$, from which, $x=-4$

It is clear, then, that a factor of $(x-2)$ indicates a root of $+2$, while a factor of $(x+4)$ indicates a root of -4

In general, we can therefore say that:

a factor of $(x-a)$ corresponds to a root of $x=a$

In practice, we always deduce the roots of a simple quadratic equation from the factors of the quadratic expression, as in the above example. However, we could reverse this process. If, by trial and error, we could determine that $x=2$ is a root of the equation $x^2+2x-8=0$ we could deduce at once that $(x-2)$ is a factor of the expression x^2+2x-8. We wouldn't normally solve quadratic equations this way – but suppose we have to factorise a cubic expression (i.e. one in which the highest power of the variable is 3). A cubic equation might have three simple linear factors and the difficulty of discovering all these factors by trial and error would be considerable. It is to deal with this kind of case that we use the **factor theorem**. This is just a generalised version of what we established above for the quadratic expression. The factor theorem provides a method of factorising any polynomial, $f(x)$, which has simple factors.

A statement of the **factor theorem** says:

'if $x = a$ is a root of the equation $f(x) = 0$, then $(x - a)$ is a factor of $f(x)$'

The following worked problems show the use of the factor theorem.

Problem 28. Factorise $x^3 - 7x - 6$ and use it to solve the cubic equation $x^3 - 7x - 6 = 0$.

Let $f(x) = x^3 - 7x - 6$

If $x = 1$, then $f(1) = 1^3 - 7(1) - 6 = -12$

If $x = 2$, then $f(2) = 2^3 - 7(2) - 6 = -12$

If $x = 3$, then $f(3) = 3^3 - 7(3) - 6 = 0$

If $f(3) = 0$, then $(x - 3)$ is a factor – from the factor theorem.

We have a choice now. We can divide $x^3 - 7x - 6$ by $(x - 3)$ or we could continue our 'trial and error' by substituting further values for x in the given expression – and hope to arrive at $f(x) = 0$

Let us do both ways. Firstly, dividing out gives:

$$
\begin{array}{r}
x^2 + 3x + 2 \\
x - 3 \;\overline{)}\; x^3 - 0 - 7x - 6 \\
\underline{x^3 - 3x^2} \\
3x^2 - 7x - 6 \\
\underline{3x^2 - 9x} \\
2x - 6 \\
\underline{2x - 6} \\
\cdot \quad \cdot
\end{array}
$$

Hence $\dfrac{x^3 - 7x - 6}{x - 3} = x^2 + 3x + 2$

i.e. $x^3 - 7x - 6 = (x - 3)(x^2 + 3x + 2)$

$x^2 + 3x + 2$ factorises 'on sight' as $(x + 1)(x + 2)$.

Therefore

$$\boldsymbol{x^3 - 7x - 6 = (x - 3)(x + 1)(x + 2)}$$

A second method is to continue to substitute values of x into $f(x)$.

Our expression for $f(3)$ was $3^3 - 7(3) - 6$. We can see that if we continue with positive values of x the first term will predominate such that $f(x)$ will not be zero.

Therefore let us try some negative values for x. Therefore $f(-1) = (-1)^3 - 7(-1) - 6 = 0$; hence $(x + 1)$ is a factor (as shown above). Also $f(-2) = (-2)^3 - 7(-2) - 6 = 0$; hence $(x + 2)$ is a factor (also as shown above).

To solve $x^3 - 7x - 6 = 0$, we substitute the factors, i.e.

$$(x - 3)(x + 1)(x + 2) = 0$$

from which, $\boldsymbol{x = 3}$, $\boldsymbol{x = -1}$ **and** $\boldsymbol{x = -2}$

Note that the values of x, i.e. 3, -1 and -2, are all factors of the constant term, i.e. 6. This can give us a clue as to what values of x we should consider.

Problem 29. Solve the cubic equation $x^3 - 2x^2 - 5x + 6 = 0$ by using the factor theorem.

Let $f(x) = x^3 - 2x^2 - 5x + 6$ and let us substitute simple values of x like 1, 2, 3, -1, -2, and so on.

$f(1) = 1^3 - 2(1)^2 - 5(1) + 6 = 0$,

hence $(x - 1)$ is a factor

$f(2) = 2^3 - 2(2)^2 - 5(2) + 6 \neq 0$

$f(3) = 3^3 - 2(3)^2 - 5(3) + 6 = 0$,

hence $(x - 3)$ is a factor

$f(-1) = (-1)^3 - 2(-1)^2 - 5(-1) + 6 \neq 0$

$f(-2) = (-2)^3 - 2(-2)^2 - 5(-2) + 6 = 0$,

hence $(x + 2)$ is a factor

Hence $x^3 - 2x^2 - 5x + 6 = (x - 1)(x - 3)(x + 2)$

Therefore if $x^3 - 2x^2 - 5x + 6 = 0$

then $(x - 1)(x - 3)(x + 2) = 0$

from which, $\boldsymbol{x = 1}$, $\boldsymbol{x = 3}$ **and** $\boldsymbol{x = -2}$

Alternatively, having obtained one factor, i.e. $(x - 1)$ we could divide this into $(x^3 - 2x^2 - 5x + 6)$ as follows:

$$
\begin{array}{r}
x^2 - x - 6 \\
x - 1 \;\overline{)}\; x^3 - 2x^2 - 5x + 6 \\
\underline{x^3 - x^2} \\
-x^2 - 5x + 6 \\
\underline{-x^2 + x} \\
-6x + 6 \\
-6x + 6 \\
\hline
\cdot \quad \cdot
\end{array}
$$

Hence $x^3 - 2x^2 - 5x + 6$

$= (x - 1)(x^2 - x - 6)$

$= \boldsymbol{(x - 1)(x - 3)(x + 2)}$

Summarising, the factor theorem provides us with a method of factorising simple expressions, and an alternative, in certain circumstances, to polynomial division.

Now try the following Practice Exercise

Practice Exercise 6 The factor theorem (Answers on page 856)

Use the factor theorem to factorise the expressions given in problems 1 to 4.

1. x^2+2x-3
2. x^3+x^2-4x-4
3. $2x^3+5x^2-4x-7$
4. $2x^3-x^2-16x+15$
5. Use the factor theorem to factorise x^3+4x^2+x-6 and hence solve the cubic equation $x^3+4x^2+x-6=0$
6. Solve the equation $x^3-2x^2-x+2=0$

1.6 The remainder theorem

Dividing a general quadratic expression (ax^2+bx+c) by $(x-p)$, where p is any whole number, by long division (see Section 1.4) gives:

$$\begin{array}{r} ax+(b+ap) \\ x-p\,\overline{)\,ax^2+bx+c} \\ \underline{ax^2-apx} \\ (b+ap)x+c \\ \underline{(b+ap)x-(b+ap)p} \\ c+(b+ap)p \end{array}$$

The remainder, $c+(b+ap)p = c+bp+ap^2$ or ap^2+bp+c. This is, in fact, what the **remainder theorem** states, i.e.

'if (ax^2+bx+c) is divided by $(x-p)$, the remainder will be ap^2+bp+c'

If, in the dividend (ax^2+bx+c), we substitute p for x we get the remainder ap^2+bp+c

For example, when $(3x^2-4x+5)$ is divided by $(x-2)$ the remainder is ap^2+bp+c (where $a=3$, $b=-4$, $c=5$ and $p=2$), i.e. the remainder is

$$3(2)^2+(-4)(2)+5 = 12-8+5 = \mathbf{9}$$

We can check this by dividing $(3x^2-4x+5)$ by $(x-2)$ by long division:

$$\begin{array}{r} 3x+2 \\ x-2\,\overline{)\,3x^2-4x+5} \\ \underline{3x^2-6x} \\ 2x+5 \\ \underline{2x-4} \\ 9 \end{array}$$

Similarly, when $(4x^2-7x+9)$ is divided by $(x+3)$, the remainder is ap^2+bp+c (where $a=4$, $b=-7$, $c=9$ and $p=-3$), i.e. the remainder is

$4(-3)^2+(-7)(-3)+9 = 36+21+9 = \mathbf{66}$

Also, when (x^2+3x-2) is divided by $(x-1)$, the remainder is $1(1)^2+3(1)-2 = \mathbf{2}$

It is not particularly useful, on its own, to know the remainder of an algebraic division. However, if the remainder should be zero then $(x-p)$ is a factor. This is very useful therefore when factorising expressions.

For example, when $(2x^2+x-3)$ is divided by $(x-1)$, the remainder is $2(1)^2+1(1)-3=0$, which means that $(x-1)$ is a factor of $(2x^2+x-3)$.

In this case the other factor is $(2x+3)$, i.e.

$$(2x^2+x-3) = (x-1)(2x-3)$$

The **remainder theorem** may also be stated for a **cubic equation** as:

'if (ax^3+bx^2+cx+d) is divided by $(x-p)$, the remainder will be ap^3+bp^2+cp+d'

As before, the remainder may be obtained by substituting p for x in the dividend.

For example, when $(3x^3+2x^2-x+4)$ is divided by $(x-1)$, the remainder is ap^3+bp^2+cp+d (where $a=3$, $b=2$, $c=-1$, $d=4$ and $p=1$), i.e. the remainder is $3(1)^3+2(1)^2+(-1)(1)+4 = 3+2-1+4 = \mathbf{8}$

Similarly, when (x^3-7x-6) is divided by $(x-3)$, the remainder is $1(3)^3+0(3)^2-7(3)-6=0$, which means that $(x-3)$ is a factor of (x^3-7x-6)

Here are some more examples on the remainder theorem.

Problem 30. Without dividing out, find the remainder when $2x^2-3x+4$ is divided by $(x-2)$

By the remainder theorem, the remainder is given by ap^2+bp+c, where $a=2$, $b=-3$, $c=4$ and $p=2$. Hence **the remainder is:**

$$2(2)^2+(-3)(2)+4=8-6+4=\mathbf{6}$$

Problem 31. Use the remainder theorem to determine the remainder when $(3x^3-2x^2+x-5)$ is divided by $(x+2)$

By the remainder theorem, the remainder is given by ap^3+bp^2+cp+d, where $a=3$, $b=-2$, $c=1$, $d=-5$ and $p=-2$
Hence **the remainder is:**

$$\begin{aligned}&3(-2)^3+(-2)(-2)^2+(1)(-2)+(-5)\\&=-24-8-2-5\\&=\mathbf{-39}\end{aligned}$$

Problem 32. Determine the remainder when (x^3-2x^2-5x+6) is divided by (a) $(x-1)$ and (b) $(x+2)$. Hence factorise the cubic expression.

(a) When (x^3-2x^2-5x+6) is divided by $(x-1)$, the remainder is given by ap^3+bp^2+cp+d, where $a=1$, $b=-2$, $c=-5$, $d=6$ and $p=1$,

i.e. **the remainder** $=(1)(1)^3+(-2)(1)^2+(-5)(1)+6$

$$=1-2-5+6=\mathbf{0}$$

Hence $(x-1)$ is a factor of (x^3-2x^2-5x+6).

(b) When (x^3-2x^2-5x+6) is divided by $(x+2)$, **the remainder is** given by

$$(1)(-2)^3+(-2)(-2)^2+(-5)(-2)+6=-8-8+10+6=\mathbf{0}$$

Hence $(x+2)$ is also a factor of (x^3-2x^2-5x+6). Therefore $(x-1)(x+2)(x\ \ )=x^3-2x^2-5x+6$. To determine the third factor (shown blank) we could

(i) divide (x^3-2x^2-5x+6) by $(x-1)(x+2)$

or (ii) use the factor theorem where $f(x)=x^3-2x^2-5x+6$ and hoping to choose a value of x which makes $f(x)=0$

or (iii) use the remainder theorem, again hoping to choose a factor $(x-p)$ which makes the remainder zero.

(i) Dividing (x^3-2x^2-5x+6) by (x^2+x-2) gives:

$$\begin{array}{r} x\ -3 \\ x^2+x-2\ \overline{)\ x^3-2x^2-5x+6} \\ \underline{x^3+\ x^2-2x} \\ -3x^2-3x+6 \\ \underline{-3x^2-3x+6} \\ \quad .\quad .\quad . \end{array}$$

Thus $\mathbf{(x^3-2x^2-5x+6)=(x-1)(x+2)(x-3)}$

(ii) Using the factor theorem, we let

$$f(x)=x^3-2x^2-5x+6$$

Then $f(3)=3^3-2(3)^2-5(3)+6=27-18-15+6=0$

Hence $(x-3)$ is a factor.

(iii) Using the remainder theorem, when (x^3-2x^2-5x+6) is divided by $(x-3)$, the remainder is given by ap^3+bp^2+cp+d, where $a=1$, $b=-2$, $c=-5$, $d=6$ and $p=3$

Hence the remainder is:

$$1(3)^3+(-2)(3)^2+(-5)(3)+6=27-18-15+6=0$$

Hence $(x-3)$ is a factor.

Thus $\mathbf{(x^3-2x^2-5x+6)=(x-1)(x+2)(x-3)}$

Now try the following Practice Exercise

Practice Exercise 7 The remainder theorem (Answers on page 856)

1. Find the remainder when $3x^2-4x+2$ is divided by

   (a) $(x-2)$ (b) $(x+1)$

2. Determine the remainder when x^3-6x^2+x-5 is divided by

   (a) $(x+2)$ (b) $(x-3)$

3. Use the remainder theorem to find the factors of $x^3 - 6x^2 + 11x - 6$

4. Determine the factors of $x^3 + 7x^2 + 14x + 8$ and hence solve the cubic equation $x^3 + 7x^2 + 14x + 8 = 0$

5. Determine the value of 'a' if $(x + 2)$ is a factor of $(x^3 - ax^2 + 7x + 10)$

6. Using the remainder theorem, solve the equation $2x^3 - x^2 - 7x + 6 = 0$

For more help on basic algebra, simple equations, transposition of formulae, simultaneous equations and quadratic equations, go to the website:
www.routledge.com/cw/bird

For fully worked solutions to each of the problems in Practice Exercises 1 to 17 in this chapter, go to website:
www.routledge.com/cw/bird

COMPANION @ WEBSITE

02: Engineering Mathematics, 8th Edition

- Chapter: **Solving quadratic equations**

Chapter 11

Solving quadratic equations

Why it is important to understand: **Solving quadratic equations**

Quadratic equations have many applications in engineering and science; they are used in describing the trajectory of a ball, determining the height of a throw, and in the concept of acceleration, velocity, ballistics and stopping power. In addition, the quadratic equation has been found to be widely evident in a number of natural processes; some of these include the processes by which light is reflected off a lens, water flows down a rocky stream, or even the manner in which fur, spots, or stripes develop on wild animals. When traffic policemen arrive at the scene of a road accident, they measure the length of the skid marks and assess the road conditions. They can then use a quadratic equation to calculate the speed of the vehicles and hence reconstruct exactly what happened. The U-shape of a parabola can describe the trajectories of water jets in a fountain and a bouncing ball, or be incorporated into structures like the parabolic reflectors that form the base of satellite dishes and car headlights. Quadratic functions can help plot the course of moving objects and assist in determining minimum and maximum values. Most of the objects we use every day, from cars to clocks, would not exist if someone somewhere hadn't applied quadratic functions to their design. Solving quadratic equations is an important skill required in all aspects of engineering.

At the end of this chapter, you should be able to:

- define a quadratic equation
- solve quadratic equations by factorisation
- solve quadratic equations by 'completing the square'
- solve quadratic equations by formula
- solve quadratic equations involving practical situations
- solve linear and quadratic equations simultaneously

11.1 Introduction to quadratic equations

As stated in Chapter 8, an **equation** is a statement that two quantities are equal and to **'solve an equation'** means 'to find the value of the unknown'. The value of the unknown is called the **root** of the equation.

A **quadratic equation** is one in which the highest power of the unknown quantity is 2. For example, $x^2 - 3x + 1 = 0$ is a quadratic equation.

There are four methods of **solving quadratic equations**.

These are: (i) **by factorisation** (where possible)
(ii) **by 'completing the square'**
(iii) **by using the 'quadratic formula'**
or (iv) **graphically** (see Chapter 31).

Engineering Mathematics. 978-1-138-67359-5, © 2017 John Bird. Published by Taylor & Francis. All rights reserved.

11.2 Solution of quadratic equations by factorisation

Multiplying out $(2x+1)(x-3)$ gives $2x^2-6x+x-3$, i.e. $2x^2-5x-3$. The reverse process of moving from $2x^2-5x-3$ to $(2x+1)(x-3)$ is called **factorising**. If the quadratic expression can be factorised this provides the simplest method of solving a quadratic equation.

For example, if $2x^2-5x-3=0$, then,

by factorising: $(2x+1)(x-3)=0$

Hence either $(2x+1)=0$ i.e. $x=-\frac{1}{2}$

or $(x-3)=0$ i.e. $x=3$

The technique of factorising is often one of 'trial and error'.

Problem 1. Solve the equations:
(a) $x^2+2x-8=0$ (b) $3x^2-11x-4=0$
by factorisation

(a) $x^2+2x-8=0$. The factors of x^2 are x and x. These are placed in brackets thus: $(x\quad)(x\quad)$

The factors of -8 are $+8$ and -1, or -8 and $+1$, or $+4$ and -2, or -4 and $+2$. The only combination to given a middle term of $+2x$ is $+4$ and -2, i.e.

$$x^2+2x-8=(x+4)(x-2)$$

(Note that the product of the two inner terms added to the product of the two outer terms must equal to the middle term, $+2x$ in this case.)

The quadratic equation $x^2+2x-8=0$ thus becomes $(x+4)(x-2)=0$

Since the only way that this can be true is for either the first or the second, or both factors to be zero, then

either $(x+4)=0$ i.e. $x=-4$

or $(x-2)=0$ i.e. $x=2$

Hence the roots of $x^2+2x-8=0$ are $x=-4$ and 2

(b) $3x^2-11x-4=0$
The factors of $3x^2$ are $3x$ and x. These are placed in brackets thus: $(3x\quad)(x\quad)$

The factors of -4 are -4 and $+1$, or $+4$ and -1, or -2 and 2

Remembering that the product of the two inner terms added to the product of the two outer terms must equal $-11x$, the only combination to give this is $+1$ and -4, i.e.

$$3x^2-11x-4=(3x+1)(x-4)$$

The quadratic equation $3x^2-11x-4=0$ thus becomes $(3x+1)(x-4)=0$

Hence, either $(3x+1)=0$ i.e. $\boldsymbol{x=-\frac{1}{3}}$

or $(x-4)=0$ i.e. $\boldsymbol{x=4}$

and both solutions may be checked in the original equation.

Problem 2. Determine the roots of:
(a) $x^2-6x+9=0$, and (b) $4x^2-25=0$, by factorisation

(a) $x^2-6x+9=0$. Hence $(x-3)\ (x-3)=0$, i.e. $(x-3)^2=0$ (the left-hand side is known as **a perfect square**). Hence $\boldsymbol{x=3}$ is the only root of the equation $x^2-6x+9=0$

(b) $4x^2-25=0$ (the left-hand side is **the difference of two squares**, $(2x)^2$ and $(5)^2$). Thus $(2x+5)(2x-5)=0$

Hence either $(2x+5)=0$ i.e. $\boldsymbol{x=-\frac{5}{2}}$

or $(2x-5)=0$ i.e. $\boldsymbol{x=\frac{5}{2}}$

Problem 3. Solve the following quadratic equations by factorising: (a) $4x^2+8x+3=0$
(b) $15x^2+2x-8=0$.

(a) $4x^2+8x+3=0$. The factors of $4x^2$ are $4x$ and x or $2x$ and $2x$. The factors of 3 are 3 and 1, or -3 and -1. Remembering that the product of the inner terms added to the product of the two outer terms must equal $+8x$, the only combination that is true (by trial and error) is:

$$(4x^2+8x+3)=(2x+3)(2x+1)$$

Hence $(2x+3)(2x+1)=0$ from which, either

$(2x+3)=0$ or $(2x+1)=0$

Thus, $2x = -3$, from which, $\boldsymbol{x = -\frac{3}{2}}$

or $2x = -1$, from which, $\boldsymbol{x = -\frac{1}{2}}$

which may be checked in the original equation.

(b) $15x^2 + 2x - 8 = 0$. The factors of $15x^2$ are $15x$ and x or $5x$ and $3x$. The factors of -8 are -4 and $+2$, or 4 and -2, or -8 and $+1$, or 8 and -1. By trial and error the only combination that works is:

$$15x^2 + 2x - 8 = (5x + 4)(3x - 2)$$

Hence $(5x+4)(3x-2) = 0$ from which

either $5x + 4 = 0$

or $3x - 2 = 0$

Hence $\boldsymbol{x = -\frac{4}{5}}$ or $\boldsymbol{x = \frac{2}{3}}$

which may be checked in the original equation.

Problem 4. The roots of quadratic equation are $\frac{1}{3}$ and -2. Determine the equation

If the roots of a quadratic equation are α and β then $(x - \alpha)(x - \beta) = 0$

Hence if $\alpha = \frac{1}{3}$ and $\beta = -2$, then

$$\left(x - \frac{1}{3}\right)(x - (-2)) = 0$$

$$\left(x - \frac{1}{3}\right)(x + 2) = 0$$

$$x^2 - \frac{1}{3}x + 2x - \frac{2}{3} = 0$$

$$x^2 + \frac{5}{3}x - \frac{2}{3} = 0$$

Hence $\boldsymbol{3x^2 + 5x - 2 = 0}$

Problem 5. Find the equations of x whose roots are: (a) 5 and -5 (b) 1.2 and -0.4

(a) If 5 and -5 are the roots of a quadratic equation then:

$$(x - 5)(x + 5) = 0$$

i.e. $x^2 - 5x + 5x - 25 = 0$

i.e. $\boldsymbol{x^2 - 25 = 0}$

(b) If 1.2 and -0.4 are the roots of a quadratic equation then:

$$(x - 1.2)(x + 0.4) = 0$$

i.e. $x^2 - 1.2x + 0.4x - 0.48 = 0$

i.e. $\boldsymbol{x^2 - 0.8x - 0.48 = 0}$

Now try the following Practice Exercise

Practice Exercise 46 Solving quadratic equations by factorisation (Answers on page 677)

In Problems 1 to 10, solve the given equations by factorisation.

1. $x^2 + 4x - 32 = 0$
2. $x^2 - 16 = 0$
3. $(x + 2)^2 = 16$
4. $2x^2 - x - 3 = 0$
5. $6x^2 - 5x + 1 = 0$
6. $10x^2 + 3x - 4 = 0$
7. $x^2 - 4x + 4 = 0$
8. $21x^2 - 25x = 4$
9. $6x^2 - 5x - 4 = 0$
10. $8x^2 + 2x - 15 = 0$

In Problems 11 to 16, determine the quadratic equations in x whose roots are:

11. 3 and 1
12. 2 and -5
13. -1 and -4
14. $2\frac{1}{2}$ and $-\frac{1}{2}$
15. 6 and -6
16. 2.4 and -0.7

11.3 Solution of quadratic equations by 'completing the square'

An expression such as x^2 or $(x+2)^2$ or $(x-3)^2$ is called a perfect square.

If $x^2 = 3$ then $x = \pm\sqrt{3}$

If $(x+2)^2 = 5$ then $x+2 = \pm\sqrt{5}$ and $x = -2 \pm \sqrt{5}$

If $(x-3)^2 = 8$ then $x-3 = \pm\sqrt{8}$ and $x = 3 \pm \sqrt{8}$

Hence if a quadratic equation can be rearranged so that one side of the equation is a perfect square and the other side of the equation is a number, then the solution of the equation is readily obtained by taking the square roots of each side as in the above examples. The process of rearranging one side of a quadratic equation into a perfect square before solving is called **'completing the square'**.

$$(x+a)^2 = x^2 + 2ax + a^2$$

Thus in order to make the quadratic expression $x^2 + 2ax$ into a perfect square it is necessary to add (half the coefficient of $x)^2$ i.e. $\left(\frac{2a}{2}\right)^2$ or a^2

For example, $x^2 + 3x$ becomes a perfect square by adding $\left(\frac{3}{2}\right)^2$, i.e.

$$x^2 + 3x + \left(\frac{3}{2}\right)^2 = \left(x + \frac{3}{2}\right)^2$$

The method is demonstrated in the following worked problems.

Problem 6. Solve $2x^2 + 5x = 3$ by 'completing the square'

The procedure is as follows:

1. Rearrange the equations so that all terms are on the same side of the equals sign (and the coefficient of the x^2 term is positive).

   Hence $2x^2 + 5x - 3 = 0$

2. Make the coefficient of the x^2 term unity. In this case this is achieved by dividing throughout by 2. Hence

   $$\frac{2x^2}{2} + \frac{5x}{2} - \frac{3}{2} = 0$$

   i.e. $x^2 + \frac{5}{2}x - \frac{3}{2} = 0$

3. Rearrange the equations so that the x^2 and x terms are on one side of the equals sign and the constant is on the other side, Hence

   $$x^2 + \frac{5}{2}x = \frac{3}{2}$$

4. Add to both sides of the equation (half the coefficient of $x)^2$. In this case the coefficient of x is $\frac{5}{2}$

   Half the coefficient squared is therefore $\left(\frac{5}{4}\right)^2$

   Thus, $x^2 + \frac{5}{2}x + \left(\frac{5}{4}\right)^2 = \frac{3}{2} + \left(\frac{5}{4}\right)^2$

   The LHS is now a perfect square, i.e.

   $$\left(x + \frac{5}{4}\right)^2 = \frac{3}{2} + \left(\frac{5}{4}\right)^2$$

5. Evaluate the RHS. Thus

   $$\left(x + \frac{5}{4}\right)^2 = \frac{3}{2} + \frac{25}{16} = \frac{24+25}{16} = \frac{49}{16}$$

6. Taking the square root of both sides of the equation (remembering that the square root of a number gives a $\pm$ answer). Thus

   $$\sqrt{\left(x + \frac{5}{4}\right)^2} = \sqrt{\frac{49}{16}}$$

   i.e. $x + \frac{5}{4} = \pm\frac{7}{4}$

7. Solve the simple equation. Thus

   $$x = -\frac{5}{4} \pm \frac{7}{4}$$

   i.e. $x = -\frac{5}{4} + \frac{7}{4} = \frac{2}{4} = \frac{1}{2}$

   and $x = -\frac{5}{4} - \frac{7}{4} = -\frac{12}{4} = -3$

   Hence $\boldsymbol{x = \frac{1}{2}}$ or $\boldsymbol{-3}$ are the roots of the equation $2x^2 + 5x = 3$

Problem 7. Solve $2x^2 + 9x + 8 = 0$, correct to 3 significant figures, by 'completing the square'

Making the coefficient of x^2 unity gives:

$$x^2 + \frac{9}{2}x + 4 = 0$$

and rearranging gives: $x^2 + \frac{9}{2}x = -4$

Adding to both sides (half the coefficient of x)^2 gives:

$$x^2+\frac{9}{2}x+\left(\frac{9}{4}\right)^2=\left(\frac{9}{4}\right)^2-4$$

The LHS is now a perfect square, thus:

$$\left(x+\frac{9}{4}\right)^2=\frac{81}{16}-4=\frac{17}{16}$$

Taking the square root of both sides gives:

$$x+\frac{9}{4}=\sqrt{\frac{17}{16}}=\pm 1.031$$

Hence $x=-\frac{9}{4}\pm 1.031$

i.e. $\boldsymbol{x=-1.22}$ or $\boldsymbol{-3.28}$, correct to 3 significant figures.

Problem 8. By 'completing the square', solve the quadratic equation $4.6y^2+3.5y-1.75=0$, correct to 3 decimal places

Making the coefficient of y^2 unity gives:

$$y^2+\frac{3.5}{4.6}y-\frac{1.75}{4.6}=0$$

and rearranging gives: $y^2+\frac{3.5}{4.6}y=\frac{1.75}{4.6}$

Adding to both sides (half the coefficient of y)^2 gives:

$$y^2+\frac{3.5}{4.6}y+\left(\frac{3.5}{9.2}\right)^2=\frac{1.75}{4.6}+\left(\frac{3.5}{9.2}\right)^2$$

The LHS is now a perfect square, thus:

$$\left(y+\frac{3.5}{9.2}\right)^2=0.5251654$$

Taking the square root of both sides gives:

$$y+\frac{3.5}{9.2}=\sqrt{0.5251654}=\pm 0.7246830$$

Hence, $y=-\frac{3.5}{9.2}\pm 0.7246830$

i.e $\boldsymbol{y=0.344}$ or $\boldsymbol{-1.105}$

Now try the following Practice Exercise

Practice Exercise 47 Solving quadratic equations by completing the square (Answers on page 678)

Solve the following equations by completing the square, each correct to 3 decimal places.

1. $x^2+4x+1=0$
2. $2x^2+5x-4=0$
3. $3x^2-x-5=0$
4. $5x^2-8x+2=0$
5. $4x^2-11x+3=0$

11.4 Solution of quadratic equations by formula

Let the general form of a quadratic equation be given by:

$$ax^2+bx+c=0$$

where a, b and c are constants.

Dividing $ax^2+bx+c=0$ by a gives:

$$x^2+\frac{b}{a}x+\frac{c}{a}=0$$

Rearranging gives:

$$x^2+\frac{b}{a}x=-\frac{c}{a}$$

Adding to each side of the equation the square of half the coefficient of the terms in x to make the LHS a perfect square gives:

$$x^2+\frac{b}{a}x+\left(\frac{b}{2a}\right)^2=\left(\frac{b}{2a}\right)^2-\frac{c}{a}$$

Rearranging gives:

$$\left(x+\frac{b}{a}\right)^2=\frac{b^2}{4a^2}-\frac{c}{a}=\frac{b^2-4ac}{4a^2}$$

Taking the square root of both sides gives:

$$x+\frac{b}{2a}=\sqrt{\frac{b^2-4ac}{4a^2}}=\frac{\pm\sqrt{b^2-4ac}}{2a}$$

Hence $x=-\frac{b}{2a}\pm\frac{\sqrt{b^2-4ac}}{2a}$

i.e. the quadratic formula is: $x = \dfrac{-b \pm \sqrt{b^2 - 4ac}}{2a}$

(This method of solution is 'completing the square' – as shown in Section 11.3.) Summarising:

if $ax^2 + bx + c = 0$

then $$\boldsymbol{x = \dfrac{-b \pm \sqrt{b^2 - 4ac}}{2a}}$$

This is known as the **quadratic formula**.

Problem 9. Solve (a) $x^2 + 2x - 8 = 0$ and (b) $3x^2 - 11x - 4 = 0$ by using the quadratic formula

(a) Comparing $x^2 + 2x - 8 = 0$ with $ax^2 + bx + c = 0$ gives $a = 1$, $b = 2$ and $c = -8$

Substituting these values into the quadratic formula

$$x = \frac{-b \pm \sqrt{b^2 - 4ac}}{2a} \text{ gives}$$

$$x = \frac{-2 \pm \sqrt{2^2 - 4(1)(-8)}}{2(1)}$$

$$= \frac{-2 \pm \sqrt{4 + 32}}{2} = \frac{-2 \pm \sqrt{36}}{2}$$

$$= \frac{-2 \pm 6}{2} = \frac{-2 + 6}{2} \text{ or } \frac{-2 - 6}{2}$$

Hence $\boldsymbol{x = \dfrac{4}{2} = 2}$ or $\dfrac{-8}{2} = \boldsymbol{-4}$ (as in Problem 1(a)).

(b) Comparing $3x^2 - 11x - 4 = 0$ with $ax^2 + bx + c = 0$ gives $a = 3$, $b = -11$ and $c = -4$. Hence,

$$x = \frac{-(-11) \pm \sqrt{(-11)^2 - 4(3)(-4)}}{2(3)}$$

$$= \frac{-11 \pm \sqrt{121 + 48}}{6} = \frac{11 \pm \sqrt{169}}{6}$$

$$= \frac{11 \pm 13}{6} = \frac{11 + 13}{6} \text{ or } \frac{11 - 13}{6}$$

Hence $\boldsymbol{x = \dfrac{24}{6} = 4}$ or $\dfrac{-2}{6} = \boldsymbol{-\dfrac{1}{3}}$ (as in Problem 1(b)).

Problem 10. Solve $4x^2 + 7x + 2 = 0$ giving the roots correct to 2 decimal places

Comparing $4x^2 + 7x + 2 = 0$ with $ax^2 + bx + c = 0$ gives $a = 4$, $b = 7$ and $c = 2$. Hence,

$$x = \frac{-7 \pm \sqrt{7^2 - 4(4)(2)}}{2(4)}$$

$$= \frac{-7 \pm \sqrt{17}}{8} = \frac{-7 \pm 4.123}{8}$$

$$= \frac{-7 + 4.123}{8} \text{ or } \frac{-7 - 4.123}{8}$$

Hence, $\boldsymbol{x = -0.36}$ or $\boldsymbol{-1.39}$, **correct to 2 decimal places**.

Now try the following Practice Exercise

Practice Exercise 48 Solving quadratic equations by formula (Answers on page 678)

Solve the following equations by using the quadratic formula, correct to 3 decimal places.

1. $2x^2 + 5x - 4 = 0$
2. $5.76x^2 + 2.86x - 1.35 = 0$
3. $2x^2 - 7x + 4 = 0$
4. $4x + 5 = \dfrac{3}{x}$
5. $(2x + 1) = \dfrac{5}{x - 3}$

11.5 Practical problems involving quadratic equations

There are many **practical problems** where a quadratic equation has first to be obtained, from given information, before it is solved.

Problem 11. Calculate the diameter of a solid cylinder which has a height of 82.0 cm and a total surface area of 2.0 m^2

Total surface area of a cylinder

= curved surface area + 2 circular ends (from Chapter 20)

$= 2\pi rh + 2\pi r^2$

(where r = radius and h = height)

Since the total surface area $= 2.0\,\text{m}^2$ and the height $h = 82\,\text{cm}$ or $0.82\,\text{m}$, then

$$2.0 = 2\pi r(0.82) + 2\pi r^2$$

i.e. $2\pi r^2 + 2\pi r(0.82) - 2.0 = 0$

Dividing throughout by 2π gives:

$$r^2 + 0.82r - \frac{1}{\pi} = 0$$

Using the quadratic formula:

$$r = \frac{-0.82 \pm \sqrt{(0.82)^2 - 4(1)\left(-\frac{1}{\pi}\right)}}{2(1)}$$

$$= \frac{-0.82 \pm \sqrt{1.9456}}{2} = \frac{-0.82 \pm 1.3948}{2}$$

$$= 0.2874 \quad \text{or} \quad -1.1074$$

Thus the radius r of the cylinder is $0.2874\,\text{m}$ (the negative solution being neglected).
Hence the diameter of the cylinder

$$= 2 \times 0.2874$$

$$= \mathbf{0.5748\,m} \quad \textbf{or} \quad \mathbf{57.5\,cm}$$

correct to 3 significant figures

Problem 12. The height s metres of a mass projected vertically upward at time t seconds is $s = ut - \frac{1}{2}gt^2$. Determine how long the mass will take after being projected to reach a height of 16 m (a) on the ascent and (b) on the descent, when $u = 30\,\text{m/s}$ and $g = 9.81\,\text{m/s}^2$

When height $s = 16\,\text{m}$, $16 = 30t - \frac{1}{2}(9.81)t^2$

i.e. $4.905t^2 - 30t + 16 = 0$

Using the quadratic formula:

$$t = \frac{-(-30) \pm \sqrt{(-30)^2 - 4(4.905)(16)}}{2(4.905)}$$

$$= \frac{30 \pm \sqrt{586.1}}{9.81} = \frac{30 \pm 24.21}{9.81}$$

$$= 5.53 \quad \text{or} \quad 0.59$$

Hence the mass will reach a height of 16 m after 0.59 s on the ascent and after 5.53 s on the descent.

Problem 13. A shed is 4.0 m long and 2.0 m wide. A concrete path of constant width is laid all the way around the shed. If the area of the path is $9.50\,\text{m}^2$ calculate its width to the nearest centimetre

Figure 11.1 shows a plan view of the shed with its surrounding path of width t metres.

Area of path $= 2(2.0 \times t) + 2t(4.0 + 2t)$

i.e. $9.50 = 4.0t + 8.0t + 4t^2$

or $4t^2 + 12.0t - 9.50 = 0$

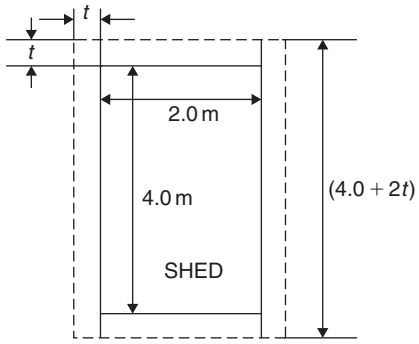

Figure 11.1

Hence $t = \frac{-(12.0) \pm \sqrt{(12.0)^2 - 4(4)(-9.50)}}{2(4)}$

$$= \frac{-12.0 \pm \sqrt{296.0}}{8}$$

$$= \frac{-12.0 \pm 17.20465}{8}$$

Hence $t = 0.6506\,\text{m}$ or $-3.65058\,\text{m}$

Neglecting the negative result which is meaningless, the width of the path, $\boldsymbol{t = 0.651\,m}$ or **65 cm**, correct to the nearest centimetre.

Problem 14. If the total surface area of a solid cone is $486.2\,\text{cm}^2$ and its slant height is 15.3 cm, determine its base diameter

From Chapter 20, page 183, the total surface area A of a solid cone is given by: $A = \pi rl + \pi r^2$ where l is the slant height and r the base radius.

If $A = 482.2$ and $l = 15.3$, then

$$482.2 = \pi r(15.3) + \pi r^2$$

i.e. $\pi r^2 + 15.3\pi r - 482.2 = 0$

or $r^2 + 15.3r - \frac{482.2}{\pi} = 0$

Using the quadratic formula,

$$r = \frac{-15.3 \pm \sqrt{(15.3)^2 - 4\left(\frac{-482.2}{\pi}\right)}}{2}$$
$$= \frac{-15.3 \pm \sqrt{848.0461}}{2}$$
$$= \frac{-15.3 \pm 29.12123}{2}$$

Hence radius $r = 6.9106\,\text{cm}$ (or $-22.21\,\text{cm}$, which is meaningless, and is thus ignored).

Thus **the diameter of the base**

$$= 2r = 2(6.9106) = \mathbf{13.82\,cm}$$

Now try the following Practice Exercise

Practice Exercise 49 Practical problems involving quadratic equations (Answers on page 678)

1. The angle a rotating shaft turns through in t seconds is given by: $\theta = \omega t + \frac{1}{2}\alpha t^2$. Determine the time taken to complete 4 radians if ω is 3.0 rad/s and α is $0.60\,\text{rad/s}^2$
2. The power P developed in an electrical circuit is given by $P = 10I - 8I^2$, where I is the current in amperes. Determine the current necessary to produce a power of 2.5 watts in the circuit
3. The sag l metres in a cable stretched between two supports, distance x m apart is given by: $l = \frac{12}{x} + x$. Determine the distance between supports when the sag is 20 m
4. The acid dissociation constant K_a of ethanoic acid is $1.8 \times 10^{-5}\,\text{mol dm}^{-3}$ for a particular solution. Using the Ostwald dilution law $K_a = \frac{x^2}{v(1-x)}$ determine x, the degree of ionization, given that $v = 10\,\text{dm}^3$
5. A rectangular building is 15 m long by 11 m wide. A concrete path of constant width is laid all the way around the building. If the area of the path is $60.0\,\text{m}^2$, calculate its width correct to the neareast millimetre
6. The total surface area of a closed cylindrical container is $20.0\,\text{m}^2$. Calculate the radius of the cylinder if its height is 2.80 m
7. The bending moment M at a point in a beam is given by $M = \frac{3x(20-x)}{2}$ where x metres is the distance from the point of support. Determine the value of x when the bending moment is 50 Nm
8. A tennis court measures 24 m by 11 m. In the layout of a number of courts an area of ground must be allowed for at the ends and at the sides of each court. If a border of constant width is allowed around each court and the total area of the court and its border is $950\,\text{m}^2$, find the width of the borders
9. Two resistors, when connected in series, have a total resistance of 40 ohms. When connected in parallel their total resistance is 8.4 ohms. If one of the resistors has a resistance R_x ohms:
   (a) show that $R_x^2 - 40R_x + 336 = 0$ and
   (b) calculated the resistance of each
10. When a ball is thrown vertically upwards its height h varies with time t according to the equation $h = 25t - 4t^2$. Determine the times, correct to 3 significant figures, when the height is 12 m.
11. In an RLC electrical circuit, reactance X is given by: $X = \omega L - \frac{1}{\omega C}$ $X = 220\Omega$, inductance $L = 800\text{mH}$ and capacitance $C = 25\mu\text{F}$. The angular velocity ω is measured in radians per second. Calculate the value of ω.

11.6 The solution of linear and quadratic equations simultaneously

Sometimes a linear equation and a quadratic equation need to be solved simultaneously. An algebraic method of solution is shown in Problem 15; a graphical solution is shown in Chapter 31, page 314.

Problem 15. Determine the values of x and y which simultaneously satisfy the equations: $y = 5x - 4 - 2x^2$ and $y = 6x - 7$

For a simultaneous solution the values of y must be equal, hence the RHS of each equation is equated.
Thus $5x-4-2x^2=6x-7$
Rearranging gives:

$$5x^2-4-2x^2-6x+7=0$$

i.e. $$-x+3-2x^2=0$$

or $$2x^2+x-3=0$$

Factorising gives: $(2x+3)(x-1)=0$

i.e. $$x=-\frac{3}{2} \quad \text{or} \quad x=1$$

In the equation $y=6x-7$

when $x=-\frac{3}{2}$, $y=6\left(\frac{-3}{2}\right)-7=-16$

and when $x=1$, $y=6-7=-1$

[Checking the result in $y=5x-4-2x^2$:

when $x=-\frac{3}{2}$, $y=5\left(-\frac{3}{2}\right)-4-2\left(-\frac{3}{2}\right)^2$

$$=-\frac{15}{2}-4-\frac{9}{2}=-16$$

as above; and when $x=1$, $y=5-4-2=-1$ as above.]
Hence the simultaneous solutions occur when

$$\boldsymbol{x=-\frac{3}{2}, \quad y=-16}$$

and when $\boldsymbol{x=1, \quad y=-1}$

Now try the following Practice Exercise

Practice Exercise 50 Solving linear and quadratic equations simultaneously (Answers on page 678)

In Problems 1 to 3 determine the solutions of the simulations equations.

1. $y=x^2+x+1$
   $y=4-x$
2. $y=15x^2+21x-11$
   $y=2x-1$
3. $2x^2+y=4+5x$
   $x+y=4$

For fully worked solutions to each of the problems in Practice Exercises 46 to 50 in this chapter, go to the website:
www.routledge.com/cw/bird

03: Higher Engineering Mathematics, 8th Edition,

- Chapter: **Trigonometric waveforms**

Chapter 15

Trigonometric waveforms

Why it is important to understand: **Trigonometric waveforms**

Trigonometric graphs are commonly used in all areas of science and engineering for modelling many different natural and mechanical phenomena such as waves, engines, acoustics, electronics, populations, UV intensity, growth of plants and animals, and so on. Periodic trigonometric graphs mean that the shape repeats itself exactly after a certain amount of time. Anything that has a regular cycle, like the tides, temperatures, rotation of the Earth, and so on, can be modelled using a sine or cosine curve. The most common periodic signal waveform that is used in electrical and electronic engineering is the sinusoidal waveform. However, an alternating a.c. waveform may not always take a smooth shape based around the sine and cosine function; a.c. waveforms can also take the shape of square or triangular waves, i.e. complex waves. In engineering, it is therefore important to have a clear understanding of sine and cosine waveforms.

At the end of this chapter, you should be able to:

- sketch sine, cosine and tangent waveforms
- determine angles of any magnitude
- understand cycle, amplitude, period, periodic time, frequency, lagging/leading angles with reference to sine and cosine waves
- perform calculations involving sinusoidal form $A\sin(\omega t \pm \alpha)$
- define a complex wave and harmonic analysis
- use harmonic synthesis to construct a complex waveform

15.1 Graphs of trigonometric functions

By drawing up tables of values from 0° to 360°, graphs of $y = \sin A$, $y = \cos A$ and $y = \tan A$ may be plotted. Values obtained with a calculator (correct to 3 decimal places – which is more than sufficient for plotting graphs), using 30° intervals, are shown below, with the respective graphs shown in Fig. 15.1.

(a) $y = \sin A$

A	0	30°	60°	90°	120°	150°	180°
$\sin A$	0	0.500	0.866	1.000	0.866	0.500	0

A	210°	240°	270°	300°	330°	360°
$\sin A$	-0.500	-0.866	-1.000	-0.866	-0.500	0

Higher Engineering Mathematics. 978-1-138-67357-1, © 2017 John Bird. Published by Taylor & Francis. All rights reserved.

(b) $y = \cos A$

A	0	30°	60°	90°	120°	150°	180°
$\cos A$	1.000	0.866	0.500	0	−0.500	−0.866	−1.000

A	210°	240°	270°	300°	330°	360°
$\cos A$	−0.866	−0.500	0	0.500	0.866	1.000

(c) $y = \tan A$

A	0	30°	60°	90°	120°	150°	180°
$\tan A$	0	0.577	1.732	∞	−1.732	−0.577	0

A	210°	240°	270°	300°	330°	360°
$\tan A$	0.577	1.732	∞	−1.732	−0.577	0

From Fig. 15.1 it is seen that:

(i) Sine and cosine graphs oscillate between peak values of ±1.

(ii) The cosine curve is the same shape as the sine curve but displaced by 90°.

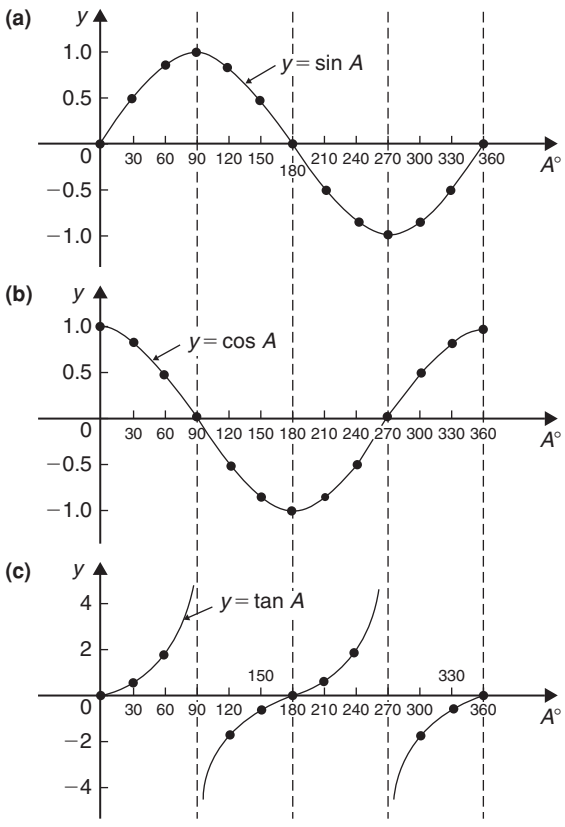

Figure 15.1

(iii) The sine and cosine curves are continuous and they repeat at intervals of 360°; the tangent curve appears to be discontinuous and repeats at intervals of 180°.

15.2 Angles of any magnitude

(i) Fig. 15.2 shows rectangular axes XX' and YY' intersecting at origin O. As with graphical work, measurements made to the right and above O are positive while those to the left and downwards are negative. Let OA be free to rotate about O. By convention, when OA moves anticlockwise angular measurement is considered positive, and vice-versa.

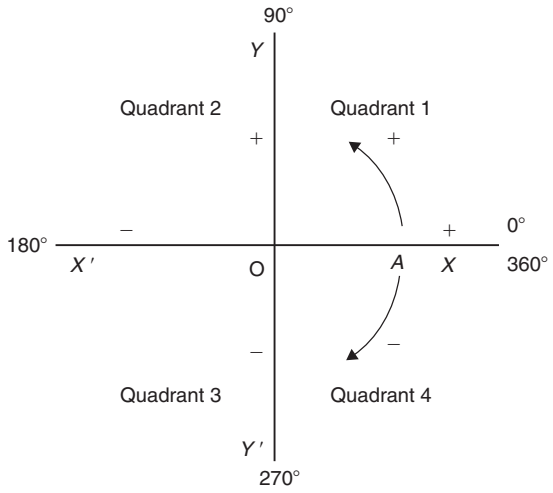

Figure 15.2

(ii) Let OA be rotated anticlockwise so that θ_1 is any angle in the first quadrant and let perpendicular AB be constructed to form the right-angled triangle OAB (see Fig. 15.3). Since all three sides of the triangle are positive, all six trigonometric ratios are positive in the first quadrant. (Note: OA is always positive since it is the radius of a circle.)

(iii) Let OA be further rotated so that θ_2 is any angle in the second quadrant and let AC be constructed to form the right-angled triangle OAC. Then:

$$\sin\theta_2 = \frac{+}{+} = + \qquad \cos\theta_2 = \frac{-}{+} = -$$

$$\tan\theta_2 = \frac{+}{-} = - \qquad \operatorname{cosec}\theta_2 = \frac{+}{+} = +$$

$$\sec\theta_2 = \frac{+}{-} = - \qquad \cot\theta_2 = \frac{-}{+} = -$$

(iv) Let OA be further rotated so that θ_3 is any angle in the third quadrant and let AD be constructed to form the right-angled triangle OAD. Then:

Section B

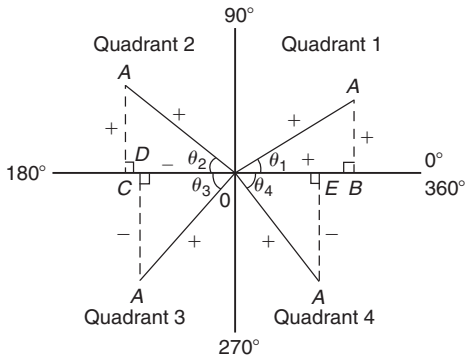

Figure 15.3

$$\sin\theta_3 = \frac{-}{+} = -\ \text{(and hence cosec}\,\theta_3\ \text{is}\ -)$$

$$\cos\theta_3 = \frac{-}{+} = -\ \text{(and hence sec}\,\theta_3\ \text{is}\ +)$$

$$\tan\theta_3 = \frac{-}{-} = +\ \text{(and hence cot}\,\theta_3\ \text{is}\ -)$$

(v) Let OA be further rotated so that θ_4 is any angle in the fourth quadrant and let AE be constructed to form the right-angled triangle OAE. Then:

$$\sin\theta_4 = \frac{-}{+} = -\ \text{(and hence cosec}\,\theta_4\ \text{is}\ -)$$

$$\cos\theta_4 = \frac{+}{+} = +\ \text{(and hence sec}\,\theta_4\ \text{is}\ +)$$

$$\tan\theta_4 = \frac{-}{+} = -\ \text{(and hence cot}\,\theta_4\ \text{is}\ -)$$

(vi) The results obtained in (ii) to (v) are summarised in Fig. 15.4. The letters underlined spell the word CAST when starting in the fourth quadrant and moving in an anticlockwise direction.

(vii) In the first quadrant of Fig. 15.1 all the curves have positive values; in the second only sine is positive; in the third only tangent is positive; in the fourth only cosine is positive (exactly as summarised in Fig. 15.4).

A knowledge of angles of any magnitude is needed when finding, for example, all the angles between 0° and 360° whose sine is, say, 0.3261. If 0.3261 is entered into a calculator and then the inverse sine key pressed (or $\sin^{-1}$ key) the answer 19.03° appears. However, there is a second angle between 0° and 360° which the calculator does not give. Sine is also positive in the second quadrant (either from CAST or from Fig. 15.1(a)). The other angle is shown in Fig. 15.5 as angle θ where $\theta = 180° - 19.03° = 160.97°$. Thus 19.03° **and** 160.97° are the angles between 0° and 360° whose sine is 0.3261 (check that $\sin 160.97° = 0.3261$ on your calculator).

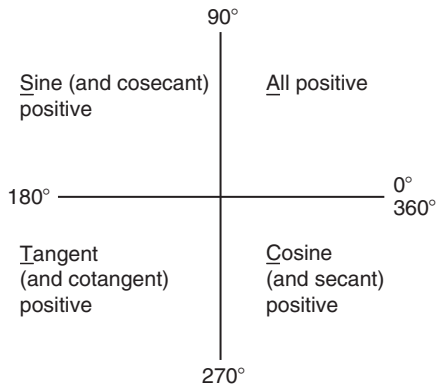

Figure 15.4

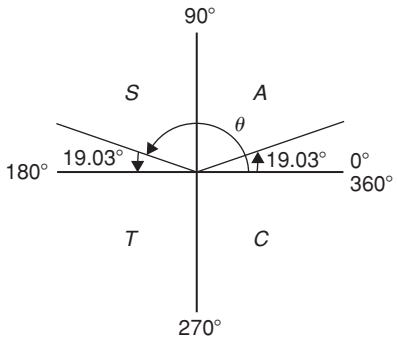

Figure 15.5

Be careful! Your calculator only gives you one of these answers. The second answer needs to be deduced from a knowledge of angles of any magnitude, as shown in the following problems.

Problem 1. Determine all the angles between 0° and 360° whose sine is −0.4638

The angles whose sine is −0.4638 occurs in the third and fourth quadrants since sine is negative in these quadrants (see Fig. 15.6(a)). From Fig. 15.6(b), $\theta = \sin^{-1} 0.4638 = 27°38'$

Measured from 0°, the two angles between 0° and 360° whose sine is −0.4638 are 180° + 27°38′, i.e. **207°38′** and 360° − 27°38′, i.e. **332°22′**. (Note that a calculator generally only gives one answer, i.e. −27.632588°)

Problem 2. Determine all the angles between 0° and 360° whose tangent is 1.7629

A tangent is positive in the first and third quadrants (see Fig. 15.7(a)). From Fig. 15.7(b), $\theta = \tan^{-1} 1.7629 = 60°26'$. Measured from 0°, the two

Section B

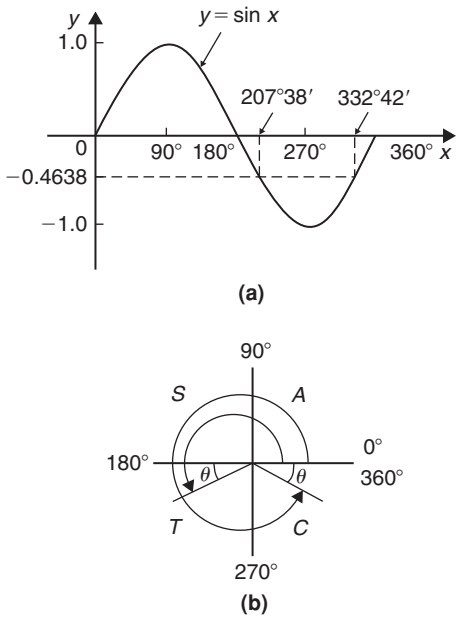

Figure 15.6

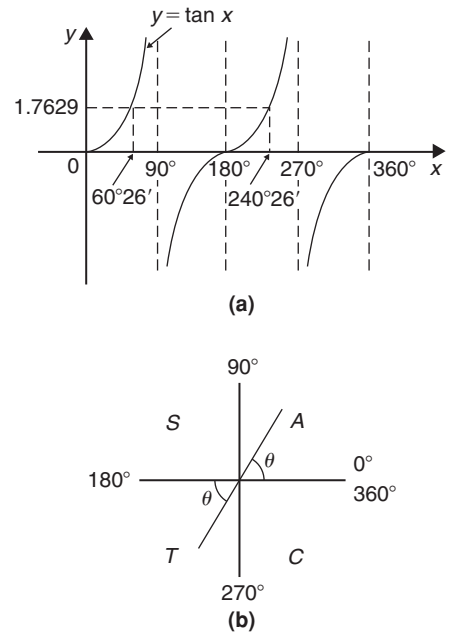

Figure 15.7

angles between 0° and 360° whose tangent is 1.7629 are **60°26′** and 180° + 60°26′, i.e. **240°26′**

Problem 3. Solve $\sec^{-1}(-2.1499) = \alpha$ for angles of α between 0° and 360°.

Secant is negative in the second and third quadrants (i.e. the same as for cosine). From Fig. 15.8,

$$\theta = \sec^{-1} 2.1499 = \cos^{-1}\left(\frac{1}{2.1499}\right) = 62°17'$$

Measured from 0°, the two angles between 0° and 360° whose secant is −2.1499 are

$\alpha = 180° - 62°17' = \mathbf{117°43'}$ and

$\alpha = 180° + 62°17' = \mathbf{242°17'}$

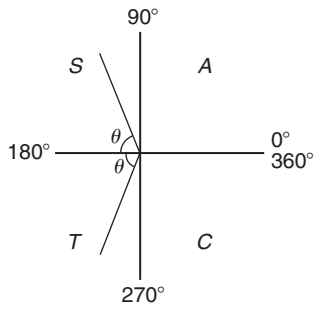

Figure 15.8

Problem 4. Solve $\cot^{-1} 1.3111 = \alpha$ for angles of α between 0° and 360°.

Cotangent is positive in the first and third quadrants (i.e. same as for tangent). From Fig. 15.9,

$$\theta = \cot^{-1} 1.3111 = \tan^{-1}\left(\frac{1}{1.3111}\right) = 37°20'$$

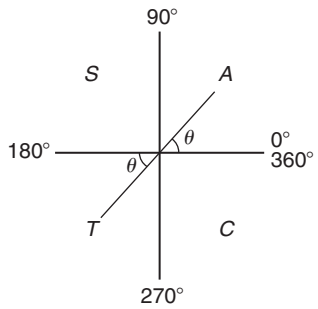

Figure 15.9

Hence $\alpha = \mathbf{37°20'}$

and $\alpha = 180° + 37°20' = \mathbf{217°20'}$

Now try the following Practice Exercise

Practice Exercise 68 Evaluating trigonometric ratios of any magnitude (Answers on page 865)

1. Find all the angles between 0° and 360° whose sine is −0.7321

Section B

2. Determine the angles between 0° and 360° whose cosecant is 2.5317

3. If cotangent $x = -0.6312$, determine the values of x in the range $0^\circ \leq x \leq 360^\circ$

In Problems 4 to 6 solve the given equations.

4. $\cos^{-1}(-0.5316) = t$

5. $\sec^{-1} 2.3162 = x$

6. $\tan^{-1} 0.8314 = \theta$

15.3 The production of a sine and cosine wave

In Fig. 15.10, let OR be a vector 1 unit long and free to rotate anticlockwise about O. In one revolution a circle is produced and is shown with 15° sectors. Each radius arm has a vertical and a horizontal component. For example, at 30°, the vertical component is TS and the horizontal component is OS.
From trigonometric ratios,

$$\sin 30^\circ = \frac{TS}{TO} = \frac{TS}{1}, \text{ i.e. } TS = \sin 30^\circ$$

$$\text{and } \cos 30^\circ = \frac{OS}{TO} = \frac{OS}{1}, \text{ i.e. } OS = \cos 30^\circ$$

The vertical component TS may be projected across to $T'S'$, which is the corresponding value of 30° on the graph of y against angle x°. If all such vertical components as TS are projected onto the graph, then a **sine wave** is produced as shown in Fig. 15.10.

If all horizontal components such as OS are projected onto a graph of y against angle x°, then a **cosine wave** is produced. It is easier to visualise these projections by redrawing the circle with the radius arm OR initially in a vertical position, as shown in Fig. 15.11.

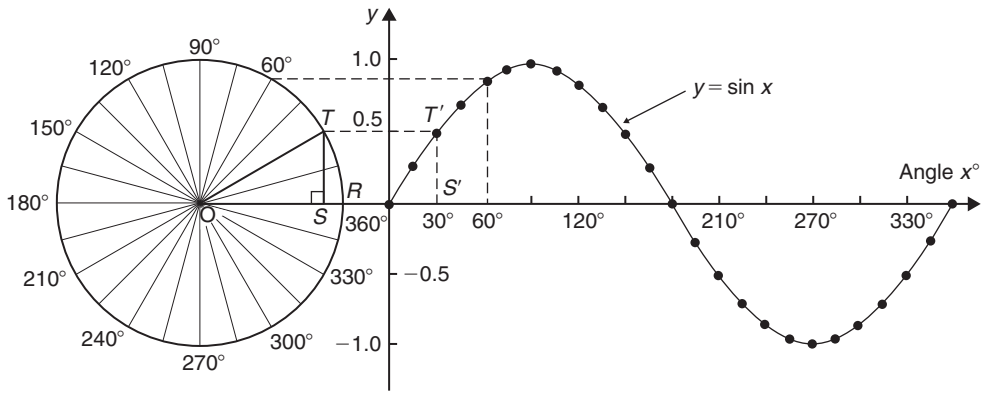

Figure 15.10

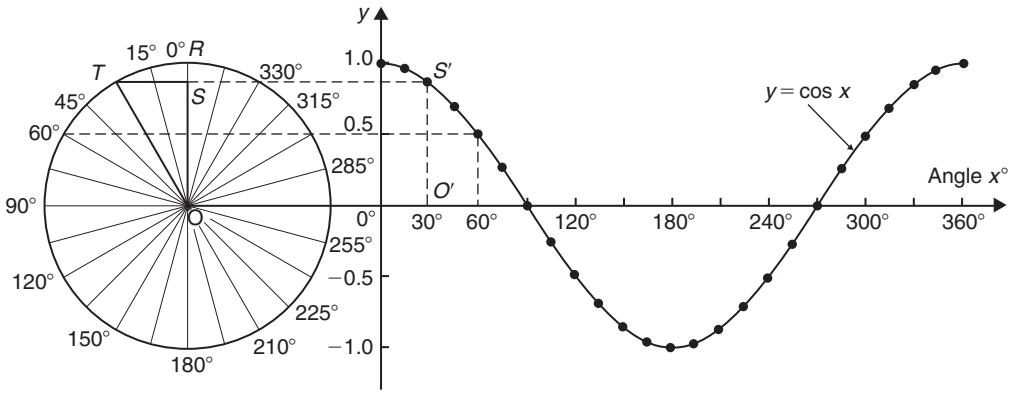

Figure 15.11

From Figs. 15.10 and 15.11 it is seen that a cosine curve is of the same form as the sine curve but is displaced by 90° (or $\pi/2$ radians).

15.4 Sine and cosine curves

Graphs of sine and cosine waveforms

(i) A graph of $y = \sin A$ is shown by the broken line in Fig. 15.12 and is obtained by drawing up a table of values as in Section 15.1. A similar table may be produced for $y = \sin 2A$.

$A°$	$2A$	$\sin 2A$	$A°$	$2A$	$\sin 2A$
0	0	0	225	450	1.0
30	60	0.866	240	480	0.866
45	90	1.0	270	540	0
60	120	0.866	300	600	−0.866
90	180	0	315	630	−1.0
120	240	−0.866	330	660	−0.866
135	270	−1.0	360	720	0
150	300	−0.866			
180	360	0			
210	420	0.866			

A graph of $y = \sin 2A$ is shown in Fig. 15.12.

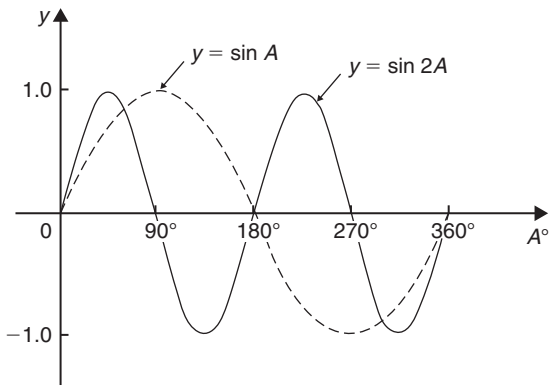

Figure 15.12

(ii) A graph of $y = \sin \frac{1}{2}A$ is shown in Fig. 15.13 using the following table of values.

$A°$	$\frac{1}{2}A$	$\sin \frac{1}{2}A$
0	0	0
30	15	0.259
60	30	0.500
90	45	0.707
120	60	0.866
150	75	0.966
180	90	1.00
210	105	0.966
240	120	0.866
270	135	0.707
300	150	0.500
330	165	0.259
360	180	0

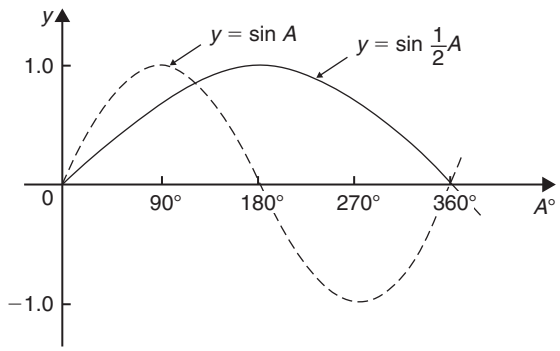

Figure 15.13

(iii) A graph of $y = \cos A$ is shown by the broken line in Fig. 15.14 and is obtained by drawing up a

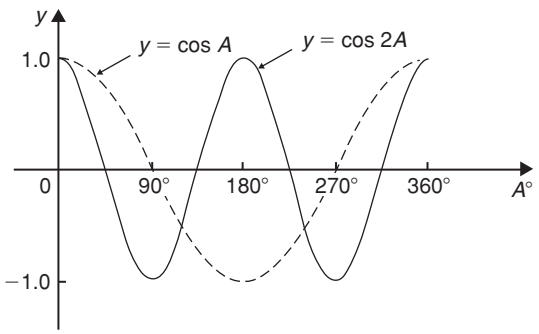

Figure 15.14

Section B

table of values. A similar table may be produced for $y = \cos 2A$ with the result as shown.

(iv) A graph of $y = \cos \frac{1}{2}A$ is shown in Fig. 15.15, which may be produced by drawing up a table of values, similar to above.

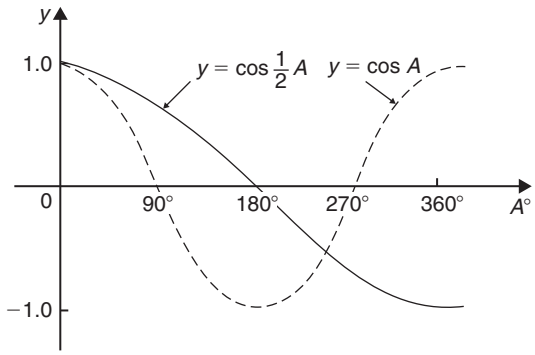

Figure 15.15

Periodic functions and period

(i) Each of the graphs shown in Figs. 15.12 to 15.15 will repeat themselves as angle A increases and are thus called **periodic functions**.

(ii) $y = \sin A$ and $y = \cos A$ repeat themselves every 360° (or 2π radians); thus 360° is called the **period** of these waveforms. $y = \sin 2A$ and $y = \cos 2A$ repeat themselves every 180° (or π radians); thus 180° is the period of these waveforms.

(iii) In general, if $y = \sin pA$ or $y = \cos pA$ (where p is a constant) then the period of the waveform is $360°/p$ (or $2\pi/p$ rad). Hence if $y = \sin 3A$ then the period is 360/3, i.e. 120°, and if $y = \cos 4A$ then the period is 360/4, i.e. 90°

Amplitude

Amplitude is the name given to the maximum or peak value of a sine wave. Each of the graphs shown in Figs. 15.12 to 15.15 has an amplitude of +1 (i.e. they oscillate between +1 and −1). However, if $y = 4 \sin A$, each of the values in the table is multiplied by 4 and the maximum value, and thus amplitude, is 4. Similarly, if $y = 5 \cos 2A$, the amplitude is 5 and the period is 360°/2, i.e. 180°.

Problem 5. Sketch $y = \sin 3A$ between $A = 0°$ and $A = 360°$.

Amplitude = 1; period = 360°/3 = 120°.

A sketch of $y = \sin 3A$ is shown in Fig. 15.16.

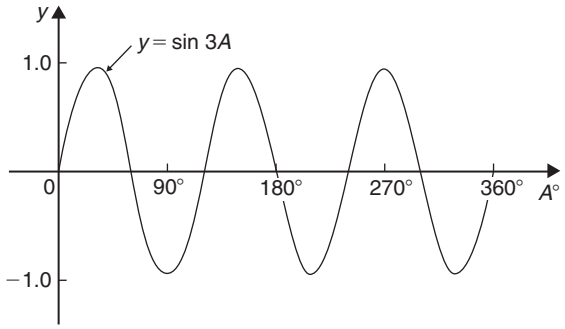

Figure 15.16

Problem 6. Sketch $y = 3 \sin 2A$ from $A = 0$ to $A = 2\pi$ radians.

Amplitude = 3, period = $2\pi/2 = \pi$ rads (or 180°)

A sketch of $y = 3 \sin 2A$ is shown in Fig. 15.17.

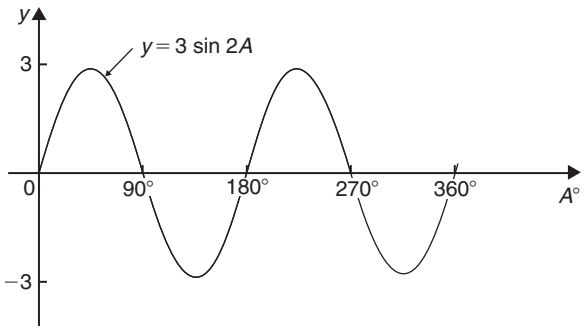

Figure 15.17

Problem 7. Sketch $y = 4 \cos 2x$ from $x = 0°$ to $x = 360°$.

Amplitude = 4; period = 360°/2 = 180°

A sketch of $y = 4 \cos 2x$ is shown in Fig. 15.18.

Section B

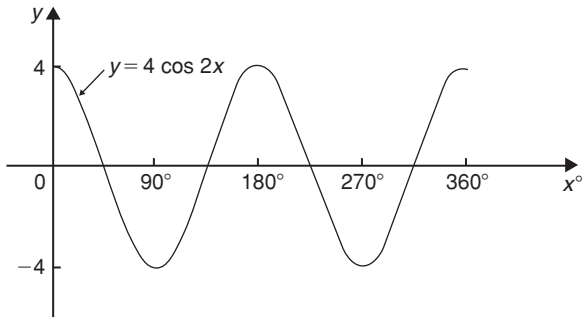

Figure 15.18

Problem 8. Sketch $y = 2\sin\frac{3}{5}A$ over one cycle.

Amplitude $= 2$; period $= \dfrac{360°}{\frac{3}{5}} = \dfrac{360° \times 5}{3} = 600°$

A sketch of $y = 2\sin\frac{3}{5}A$ is shown in Fig. 15.19.

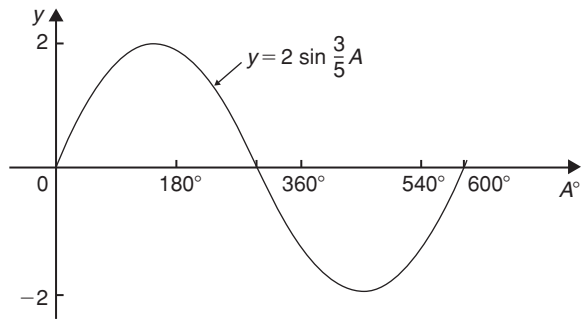

Figure 15.19

Lagging and leading angles

(i) A sine or cosine curve may not always start at 0°. To show this a periodic function is represented by $y = \sin(A \pm \alpha)$ or $y = \cos(A \pm \alpha)$ where α is a phase displacement compared with $y = \sin A$ or $y = \cos A$.

(ii) By drawing up a table of values, a graph of $y = \sin(A - 60°)$ may be plotted as shown in Fig. 15.20. If $y = \sin A$ is assumed to start at 0° then $y = \sin(A - 60°)$ starts 60° later (i.e. has a zero value 60° later). Thus $y = \sin(A - 60°)$ is said to **lag** $y = \sin A$ by 60°.

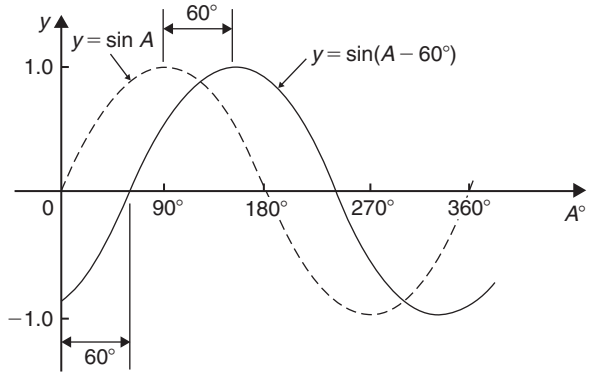

Figure 15.20

(iii) By drawing up a table of values, a graph of $y = \cos(A + 45°)$ may be plotted as shown in Fig. 15.21. If $y = \cos A$ is assumed to start at 0° then $y = \cos(A + 45°)$ starts 45° earlier (i.e. has a zero value 45° earlier). Thus $y = \cos(A + 45°)$ is said to **lead** $y = \cos A$ by 45°

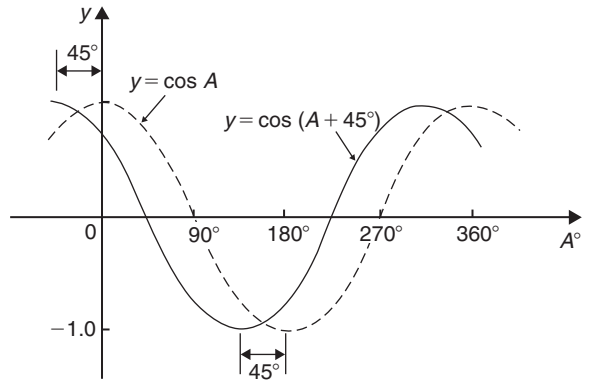

Figure 15.21

(iv) Generally, a graph of $y = \sin(A - \alpha)$ lags $y = \sin A$ by angle α, and a graph of $y = \sin(A + \alpha)$ leads $y = \sin A$ by angle α.

(v) A cosine curve is the same shape as a sine curve but starts 90° earlier, i.e. leads by 90°. Hence $\cos A = \sin(A + 90°)$

Problem 9. Sketch $y = 5\sin(A + 30°)$ from $A = 0°$ to $A = 360°$.

Amplitude $= 5$; period $= 360°/1 = 360°$.

$5\sin(A + 30°)$ leads $5\sin A$ by 30° (i.e. starts 30° earlier).

Section B

A sketch of $y = 5\sin(A + 30°)$ is shown in Fig. 15.22.

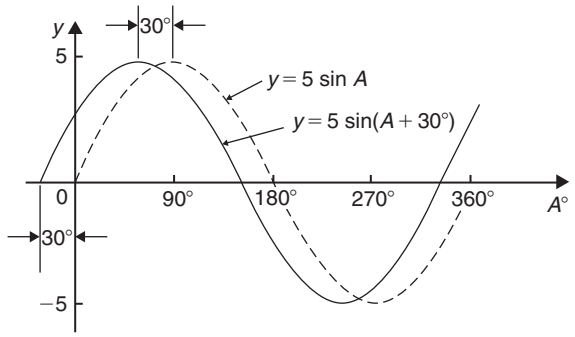

Figure 15.22

Problem 10. Sketch $y = 7\sin(2A - \pi/3)$ in the range $0 \leq A \leq 2\pi$

Amplitude = 7; period = $2\pi/2 = \pi$ radians.

In general, $y = \sin(pt - \alpha)$ **lags** $y = \sin pt$ **by** α/p, hence $7\sin(2A - \pi/3)$ lags $7\sin 2A$ by $(\pi/3)/2$, i.e. $\pi/6$ rad or 30°.

A sketch of $y = 7\sin(2A - \pi/3)$ is shown in Fig. 15.23.

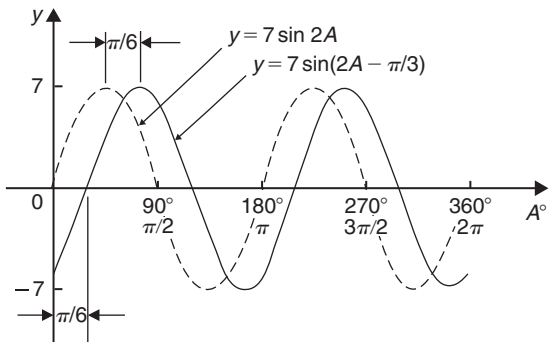

Figure 15.23

Problem 11. Sketch $y = 2\cos(\omega t - 3\pi/10)$ over one cycle.

Amplitude = 2; period = $2\pi/\omega$ rad.

$2\cos(\omega t - 3\pi/10)$ lags $2\cos\omega t$ by $3\pi/10\omega$ seconds.

A sketch of $y = 2\cos(\omega t - 3\pi/10)$ is shown in Fig. 15.24.

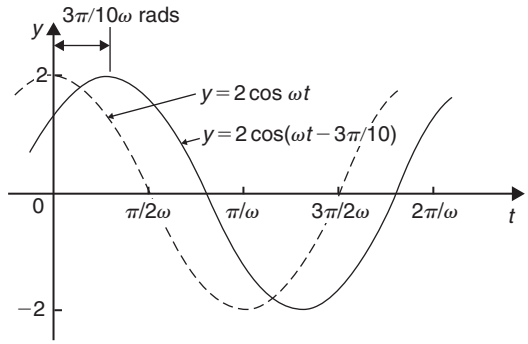

Figure 15.24

Graphs of $\sin^2 A$ and $\cos^2 A$

(i) A graph of $y = \sin^2 A$ is shown in Fig. 15.25 using the following table of values.

$A°$	$\sin A$	$(\sin A)^2 = \sin^2 A$
0	0	0
30	0.50	0.25
60	0.866	0.75
90	1.0	1.0
120	0.866	0.75
150	0.50	0.25
180	0	0
210	−0.50	0.25
240	−0.866	0.75
270	−1.0	1.0
300	−0.866	0.75
330	−0.50	0.25
360	0	0

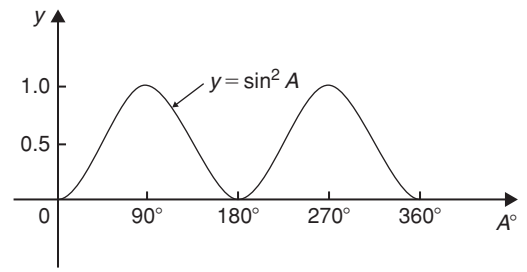

Figure 15.25

(ii) A graph of $y = \cos^2 A$ is shown in Fig. 15.26, obtained by drawing up a table of values, similar to above.

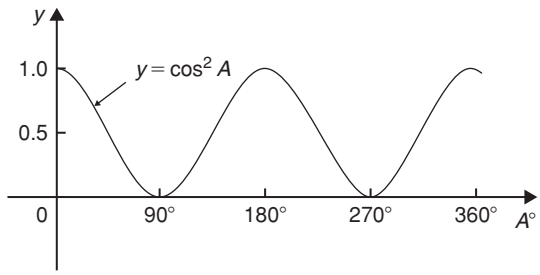

Figure 15.26

(iii) $y = \sin^2 A$ and $y = \cos^2 A$ are both periodic functions of period 180° (or π rad) and both contain only positive values. Thus a graph of $y = \sin^2 2A$ has a period 180°/2, i.e. 90°. Similarly, a graph of $y = 4\cos^2 3A$ has a maximum value of 4 and a period of 180°/3, i.e. 60°.

Problem 12. Sketch $y = 3\sin^2 \frac{1}{2}A$ in the range $0 < A < 360°$.

Maximum value = 3; period = 180°/(1/2) = 360°
A sketch of $3\sin^2 \frac{1}{2}A$ is shown in Fig. 15.27.

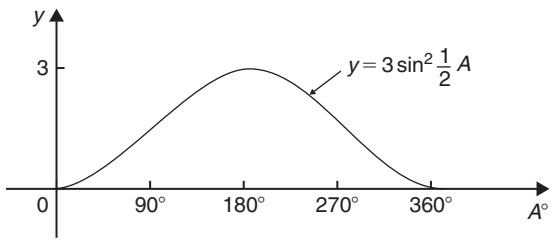

Figure 15.27

Problem 13. Sketch $y = 7\cos^2 2A$ between $A = 0°$ and $A = 360°$

Maximum value = 7; period = 180°/2 = 90°
A sketch of $y = 7\cos^2 2A$ is shown in Fig. 15.28.

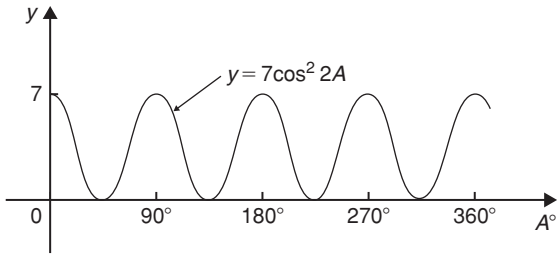

Figure 15.28

Now try the following Practice Exercise

Practice Exercise 69 Sine and cosine curves (Answers on page 865)

In Problems 1 to 9 state the amplitude and period of the waveform and sketch the curve between 0° and 360°.

1. $y = \cos 3A$
2. $y = 2\sin\frac{5x}{2}$
3. $y = 3\sin 4t$
4. $y = 3\cos\frac{\theta}{2}$
5. $y = \frac{7}{2}\sin\frac{3x}{8}$
6. $y = 6\sin(t - 45°)$
7. $y = 4\cos(2\theta + 30°)$
8. $y = 2\sin^2 2t$
9. $y = 5\cos^2\frac{3}{2}\theta$

15.5 Sinusoidal form $A\sin(\omega t \pm \alpha)$

In Fig. 15.29, let OR represent a vector that is free to rotate anticlockwise about O at a velocity of ω rad/s. A rotating vector is called a **phasor**. After a time t seconds OR will have turned through an angle ωt radians (shown as angle TOR in Fig. 15.29). If ST is constructed perpendicular to OR, then $\sin\omega t = ST/TO$, i.e. $ST = TO\sin\omega t$.

If all such vertical components are projected onto a graph of y against ωt, a sine wave results of amplitude OR (as shown in Section 15.3).

If phasor OR makes one revolution (i.e. 2π radians) in T seconds, then the angular velocity,

Section B

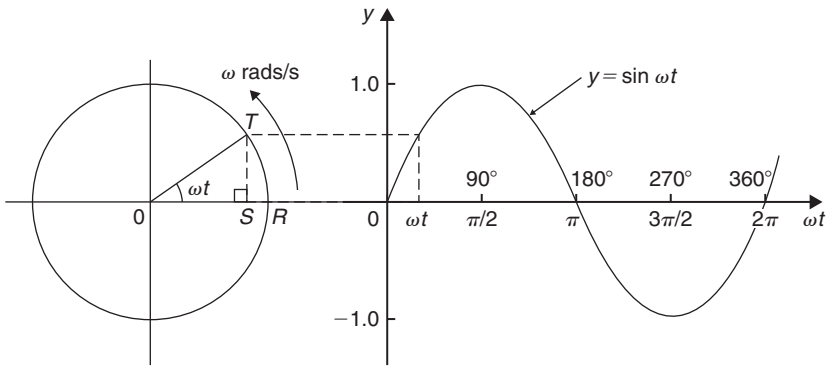

Figure 15.29

$\omega = 2\pi/T$ rad/s, from which, $\boldsymbol{T = 2\pi/\omega}$ **seconds**.
T is known as the **periodic time**.
The number of complete cycles occurring per second is called the **frequency, f**

$$\text{Frequency} = \frac{\text{number of cycles}}{\text{second}} = \frac{1}{T}$$

$$= \frac{\omega}{2\pi} \text{ i.e. } \boldsymbol{f = \frac{\omega}{2\pi}\ \text{Hz}}$$

Hence **angular velocity**, $\boldsymbol{\omega = 2\pi f}$ **rad/s**

Amplitude is the name given to the maximum or peak value of a sine wave, as explained in Section 15.3. The amplitude of the sine wave shown in Fig. 15.29 is 1.

A sine or cosine wave may not always start at 0°. To show this a periodic function is represented by $y = \sin(\omega t \pm \alpha)$ or $y = \cos(\omega t \pm \alpha)$, where α is a phase displacement compared with $y = \sin A$ or $y = \cos A$. A graph of $y = \sin(\omega t - \alpha)$ **lags** $y = \sin \omega t$ by angle α, and a graph of $y = \sin(\omega t + \alpha)$ **leads** $y = \sin \omega t$ by angle α.

The angle ωt is measured in **radians** (i.e. $\left(\omega \frac{\text{rad}}{\text{s}}\right)(t\text{s}) = \omega t$ radians) hence angle α should also be in radians.
The relationship between degrees and radians is:

$$360° = 2\pi \text{ radians or } \boldsymbol{180° = \pi \text{ radians}}$$

Hence 1 rad $= \frac{180}{\pi} = 57.30°$ and, for example, $71° = 71 \times \frac{\pi}{180} = 1.239$ rad.

Given a general sinusoidal function
$\boldsymbol{y = A\sin(\omega t \pm \alpha)}$, then

(i) A = amplitude

(ii) ω = angular velocity $= 2\pi f$ rad/s

(iii) $\frac{2\pi}{\omega}$ = periodic time T seconds

(iv) $\frac{\omega}{2\pi}$ = frequency, f hertz

(v) α = angle of lead or lag (compared with $y = A\sin\omega t$)

Problem 14. An alternating current is given by $i = 30\sin(100\pi t + 0.27)$ amperes. Find the amplitude, periodic time, frequency and phase angle (in degrees and minutes).

$i = 30\sin(100\pi t + 0.27)$ A, hence **amplitude = 30 A**
Angular velocity $\omega = 100\pi$, hence

$$\textbf{periodic time, } T = \frac{2\pi}{\omega} = \frac{2\pi}{100\pi} = \frac{1}{50}$$

$$= \textbf{0.02 s or 20 ms}$$

$$\textbf{Frequency, } f = \frac{1}{T} = \frac{1}{0.02} = \textbf{50 Hz}$$

$$\textbf{Phase angle, } \alpha = 0.27\,\text{rad} = \left(0.27 \times \frac{180}{\pi}\right)°$$

$$= \textbf{15.47° or 15°28′ leading}$$

$$\boldsymbol{i = 30\sin(100\pi t)}$$

Problem 15. An oscillating mechanism has a maximum displacement of 2.5 m and a frequency of 60 Hz. At time $t = 0$ the displacement is 90 cm. Express the displacement in the general form $A\sin(\omega t \pm \alpha)$.

Section B

Amplitude = maximum displacement = 2.5 m.
Angular velocity, $\omega = 2\pi f = 2\pi(60) = 120\pi$ rad/s.
Hence displacement $= 2.5\sin(120\pi t + \alpha)$ m.
When $t = 0$, displacement = 90 cm = 0.90 m.

Hence $0.90 = 2.\sin(0 + \alpha)$

i.e. $\sin\alpha = \dfrac{0.90}{2.5} = 0.36$

Hence $\alpha = \arcsin 0.36 = 21.10^\circ = 21^\circ 6'$

$= 0.368$ rad

Thus **displacement $= 2.5\sin(120\pi t + 0.368)$ m**

Problem 16. The instantaneous value of voltage in an a.c. circuit at any time t seconds is given by $v = 340\sin(50\pi t - 0.541)$ volts. Determine:

(a) the amplitude, periodic time, frequency and phase angle (in degrees)

(b) the value of the voltage when $t = 0$

(c) the value of the voltage when $t = 10$ ms

(d) the time when the voltage first reaches 200 V

(e) the time when the voltage is a maximum.

Sketch one cycle of the waveform.

(a) **Amplitude = 340 V**
Angular velocity, $\omega = 50\pi$

Hence **periodic time,** $T = \dfrac{2\pi}{\omega} = \dfrac{2\pi}{50\pi} = \dfrac{1}{25}$

$= \mathbf{0.04\,s}$ or **40 ms**

Frequency, $f = \dfrac{1}{T} = \dfrac{1}{0.04} = \mathbf{25\,Hz}$

Phase angle $= 0.541$ rad $= \left(0.541 \times \dfrac{180}{\pi}\right)$

$= \mathbf{31^\circ\ lagging}\ v = 340\sin(50\pi t)$

(b) **When $t = 0$,**

$v = 340\sin(0 - 0.541) = 340\sin(-31^\circ)$

$= \mathbf{-175.1\,V}$

(c) **When $t = 10$ ms**

then $v = 340\sin\left(50\pi\dfrac{10}{10^3} - 0.541\right)$

$= 340\sin(1.0298) = 340\sin 59^\circ$

$= \mathbf{291.4\,V}$

(d) When $v = 200$ volts

then $200 = 340\sin(50\pi t - 0.541)$

$\dfrac{200}{340} = \sin(50\pi t - 0.541)$

Hence $(50\pi t - 0.541) = \sin^{-1}\dfrac{200}{340}$

$= 36.03^\circ$ or 0.6288 rad

$50\pi t = 0.6288 + 0.541$

$= 1.1698$

Hence when $v = 200$ V,

time, $t = \dfrac{1.1698}{50\pi} = \mathbf{7.447\,ms}$

(e) When the voltage is a maximum, $v = 340$ V.

Hence $340 = 340\sin(50\pi t - 0.541)$

$1 = \sin(50\pi t - 0.541)$

$50\pi t - 0.541 = \sin^{-1} 1$

$= 90^\circ$ or 1.5708 rad

$50\pi t = 1.5708 + 0.541 = 2.1118$

Hence time, $t = \dfrac{2.1118}{50\pi} = \mathbf{13.44\,ms}$

A sketch of $v = 340\sin(50\pi t - 0.541)$ volts is shown in Fig. 15.30.

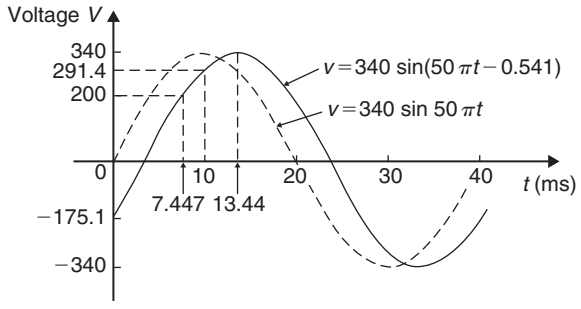

Figure 15.30

Section B

Now try the following Practice Exercise

Practice Exercise 70 The sinusoidal form $A\sin(\omega t \pm \alpha)$ (Answers on page 865)

In Problems 1 to 3, find (a) the amplitude, (b) the frequency, (c) the periodic time, and (d) the phase angle (stating whether it is leading or lagging $A\sin\omega t$) of the alternating quantities given.

1. $i = 40\sin(50\pi t + 0.29)$ mA
2. $y = 75\sin(40t - 0.54)$ cm
3. $v = 300\sin(200\pi t - 0.412)$ V
4. A sinusoidal voltage has a maximum value of 120 V and a frequency of 50 Hz. At time $t = 0$, the voltage is (a) zero and (b) 50 V. Express the instantaneous voltage v in the form $v = A\sin(\omega t \pm \alpha)$
5. An alternating current has a periodic time of 25 ms and a maximum value of 20 A. When time $t = 0$, current $i = -10$ amperes. Express the current i in the form $i = A\sin(\omega t \pm \alpha)$
6. An oscillating mechanism has a maximum displacement of 3.2 m and a frequency of 50 Hz. At time $t = 0$ the displacement is 150 cm. Express the displacement in the general form $A\sin(\omega t \pm \alpha)$
7. The current in an a.c. circuit at any time t seconds is given by:

$$i = 5\sin(100\pi t - 0.432) \text{ amperes}$$

Determine (a) the amplitude, frequency, periodic time and phase angle (in degrees), (b) the value of current at $t = 0$, (c) the value of current at $t = 8$ ms, (d) the time when the current is first a maximum, (e) the time when the current first reaches 3A. Sketch one cycle of the waveform showing relevant points.

15.6 Harmonic synthesis with complex waveforms

A waveform that is not sinusoidal is called a **complex wave**. **Harmonic analysis** is the process of resolving a complex periodic waveform into a series of sinusoidal components of ascending order of frequency. Many of the waveforms met in practice can be represented by the following mathematical expression.

$$v = V_{1m}\sin(\omega t + \alpha_1) + V_{2m}\sin(2\omega t + \alpha_2) + \cdots + V_{nm}\sin(n\omega t + \alpha_n)$$

and the magnitude of their harmonic components together with their phase may be calculated using **Fourier series** (see Chapters 73 to 76). **Numerical methods** are used to analyse waveforms for which simple mathematical expressions cannot be obtained. A numerical method of harmonic analysis is explained in Chapter 77 on page 801. In a laboratory, waveform analysis may be performed using a **waveform analyser** which produces a direct readout of the component waves present in a complex wave.

By adding the instantaneous values of the fundamental and progressive harmonics of a complex wave for given instants in time, the shape of a complex waveform can be gradually built up. This graphical procedure is known as **harmonic synthesis** (synthesis meaning 'the putting together of parts or elements so as to make up a complex whole'). For more on the addition of alternating waveforms, see Chapter 27.

Some examples of harmonic synthesis are considered in the following worked problems.

Problem 17. Use harmonic synthesis to construct the complex voltage given by:

$$v_1 = 100\sin\omega t + 30\sin 3\omega t \text{ volts.}$$

The waveform is made up of a fundamental wave of maximum value 100 V and frequency, $f = \omega/2\pi$ hertz and a third harmonic component of maximum value 30 V and frequency $= 3\omega/2\pi (= 3f)$, the fundamental and third harmonics being initially in phase with each other.

In Fig. 15.31, the fundamental waveform is shown by the broken line plotted over one cycle, the periodic time T being $2\pi/\omega$ seconds. On the same axis is plotted $30\sin 3\omega t$, shown by the dotted line, having a maximum value of 30 V and for which three cycles are completed in time T seconds. At zero time, $30\sin 3\omega t$ is in phase with $100\sin\omega t$.

The fundamental and third harmonic are combined by adding ordinates at intervals to produce the waveform for v_1, as shown. For example, at time $T/12$ seconds, the fundamental has a value of 50 V and the third harmonic a value of 30 V. Adding gives a value of 80 V for waveform v_1 at time $T/12$ seconds. Similarly, at time

Section B

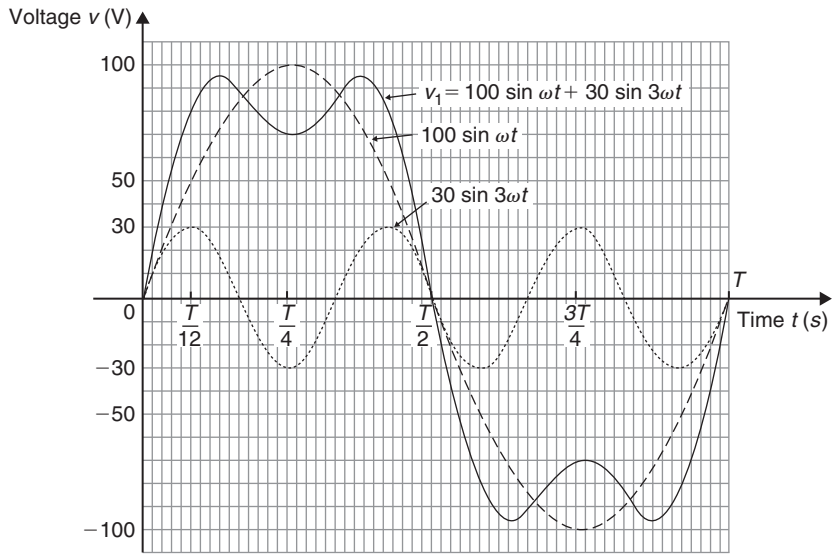

Figure 15.31

$T/4$ seconds, the fundamental has a value of 100 V and the third harmonic a value of −30 V. After addition, the resultant waveform v_1 is 70 V at $T/4$. The procedure is continued between $t = 0$ and $t = T$ to produce the complex waveform for v_1. The negative half-cycle of waveform v_1 is seen to be identical in shape to the positive half-cycle.

If further odd harmonics of the appropriate amplitude and phase were added to v_1 a good approximation to a **square wave** would result.

Problem 18. Construct the complex voltage given by:

$$v_2 = 100\sin\omega t + 30\sin\left(3\omega t + \frac{\pi}{2}\right) \text{ volts.}$$

The peak value of the fundamental is 100 volts and the peak value of the third harmonic is 30 V. However, the third harmonic has a phase displacement of $\frac{\pi}{2}$ radian leading (i.e. leading $30\sin 3\omega t$ by $\frac{\pi}{2}$ radian). Note that, since the periodic time of the fundamental is T seconds, the periodic time of the third harmonic is $T/3$ seconds, and a phase displacement of $\frac{\pi}{2}$ radian or $\frac{1}{4}$ cycle of the third harmonic represents a time interval of $(T/3) \div 4$, i.e. $T/12$ seconds.

Fig. 15.32 shows graphs of $100\sin\omega t$ and $30\sin\left(3\omega t + \frac{\pi}{2}\right)$ over the time for one cycle of the fundamental. When ordinates of the two graphs are added at intervals, the resultant waveform v_2 is as shown. If the negative half-cycle in Fig. 15.32 is reversed it can be seen that the shape of the positive and negative half-cycles are identical.

Problems 17 and 18 demonstrate that whenever odd harmonics are added to a fundamental waveform, whether initially in phase with each other or not, the positive and negative half-cycles of the resultant complex wave are identical in shape. This is a feature of waveforms containing the fundamental and odd harmonics.

Problem 19. Use harmonic synthesis to construct the complex current given by:

$$i_1 = 10\sin\omega t + 4\sin 2\omega t \text{ amperes.}$$

Current i_1 consists of a fundamental component, $10\sin\omega t$, and a second harmonic component, $4\sin 2\omega t$, the components being initially in phase with each other. The fundamental and second harmonic are shown plotted separately in Fig. 15.33. By adding ordinates at intervals, the complex waveform representing i_1 is produced as shown. It is noted that if all the values in the negative half-cycle were reversed then this half-cycle would appear as a mirror image of the positive half-cycle about a vertical line drawn through time, $t = T/2$.

Problem 20. Construct the complex current given by:

$$i_2 = 10\sin\omega t + 4\sin\left(2\omega t + \frac{\pi}{2}\right) \text{ amperes.}$$

Section B

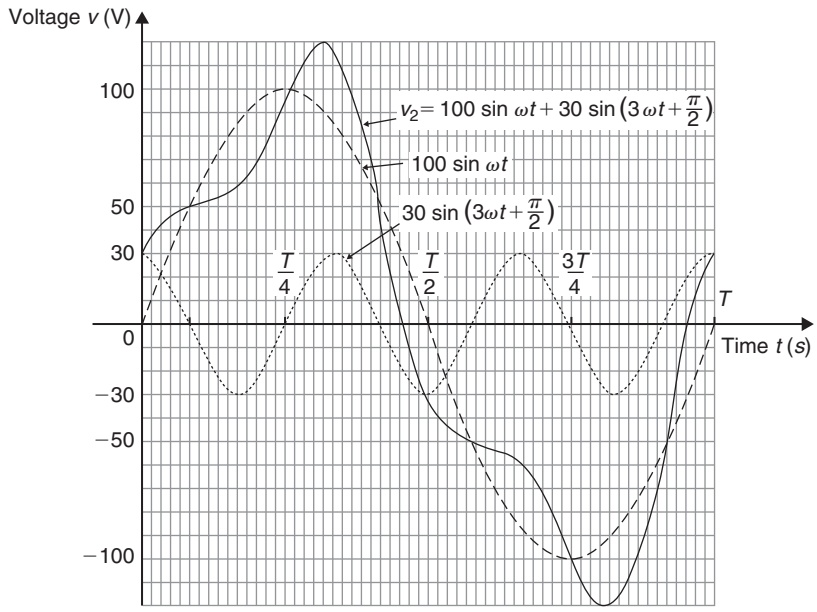

Figure 15.32

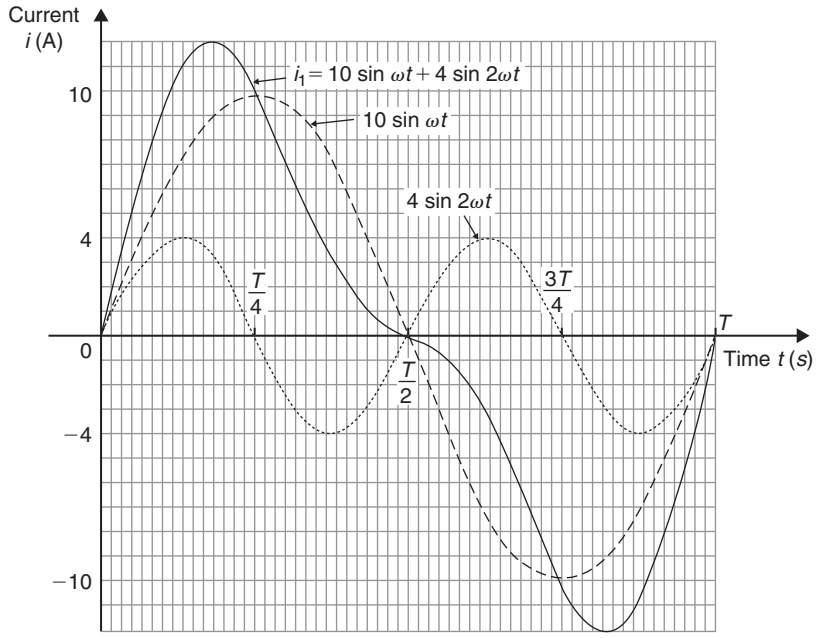

Figure 15.33

The fundamental component, $10\sin\omega t$, and the second harmonic component, having an amplitude of 4 A and a phase displacement of $\frac{\pi}{2}$ radian leading (i.e. leading $4\sin 2\omega t$ by $\frac{\pi}{2}$ radian or $T/8$ seconds), are shown plotted separately in Fig. 15.34. By adding ordinates at intervals, the complex waveform for i_2 is produced as shown. The positive and negative half-cycles of the resultant waveform are seen to be quite dissimilar.

From Problems 18 and 19 it is seen that whenever even harmonics are added to a fundamental component:

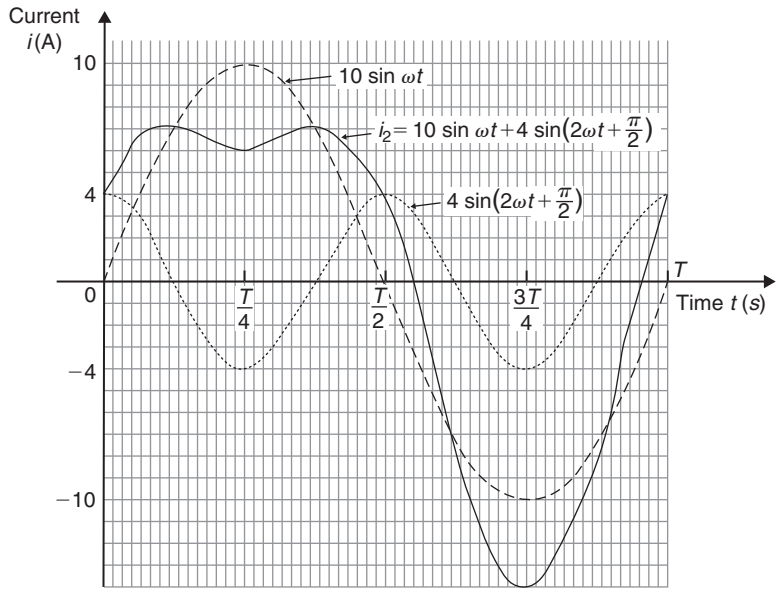

Figure 15.34

(a) if the harmonics are initially in phase, the negative half-cycle, when reversed, is a mirror image of the positive half-cycle about a vertical line drawn through time, $t = T/2$.

(b) if the harmonics are initially out of phase with each other, the positive and negative half-cycles are dissimilar.

These are features of waveforms containing the fundamental and even harmonics.

Problem 21. Use harmonic synthesis to construct the complex current expression given by:

$$i = 32 + 50\sin\omega t + 20\sin\left(2\omega t - \frac{\pi}{2}\right)\text{ mA}$$

The current i comprises three components – a 32 mA d.c. component, a fundamental of amplitude 50 mA and a second harmonic of amplitude 20 mA, lagging by $\frac{\pi}{2}$ radian. The fundamental and second harmonic are shown separately in Fig. 15.35. Adding ordinates at intervals gives the complex waveform $50\sin\omega t + 20\sin\left(2\omega t - \frac{\pi}{2}\right)$

This waveform is then added to the 32 mA d.c. component to produce the waveform i as shown. The effect of the d.c. component is to shift the whole wave 32 mA upward. The waveform approaches that expected from a **half-wave rectifier**.

Problem 22. A complex waveform v comprises a fundamental voltage of 240 V rms and frequency 50 Hz, together with a 20% third harmonic which has a phase angle lagging by $3\pi/4$ rad at time $t = 0$. (a) Write down an expression to represent voltage v. (b) Use harmonic synthesis to sketch the complex waveform representing voltage v over one cycle of the fundamental component.

(a) A fundamental voltage having an rms value of 240 V has a maximum value, or amplitude of $\sqrt{2}$ (240), i.e. 339.4 V.

If the fundamental frequency is 50 Hz then angular velocity, $\omega = 2\pi f = 2\pi(50) = 100\pi$ rad/s. Hence the fundamental voltage is represented by $339.4\sin 100\pi t$ volts. Since the fundamental frequency is 50 Hz, the time for one cycle of the fundamental is given by $T = 1/f = 1/50$ s or 20 ms.

The third harmonic has an amplitude equal to 20% of 339.4 V, i.e. 67.9 V. The frequency of the third harmonic component is $3 \times 50 = 150$ Hz, thus the angular velocity is $2\pi(150)$, i.e. 300π rad/s. Hence

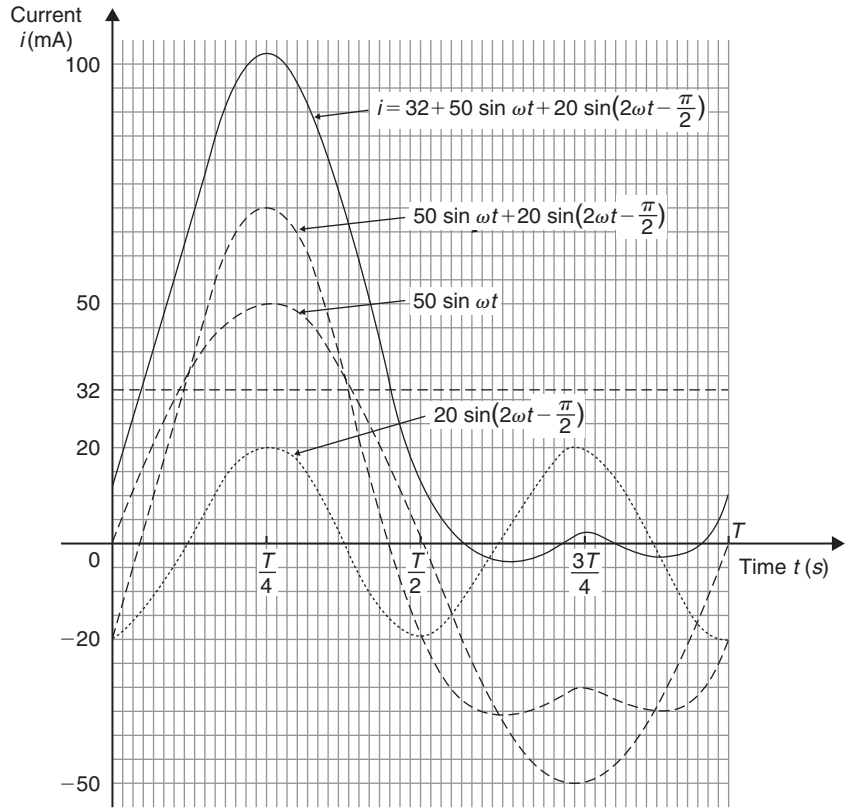

Figure 15.35

the third harmonic voltage is represented by $67.9\sin(300\pi t - 3\pi/4)$ volts. Thus

$$\textbf{voltage, } v = 339.4\sin 100\pi t + 67.9\sin(300\pi t - 3\pi/4) \text{ volts}$$

(b) One cycle of the fundamental, $339.4\sin 100\pi t$, is shown sketched in Fig. 15.36, together with three cycles of the third harmonic component, $67.9\sin(300\pi t - 3\pi/4)$ initially lagging by $3\pi/4$ rad. By adding ordinates at intervals,

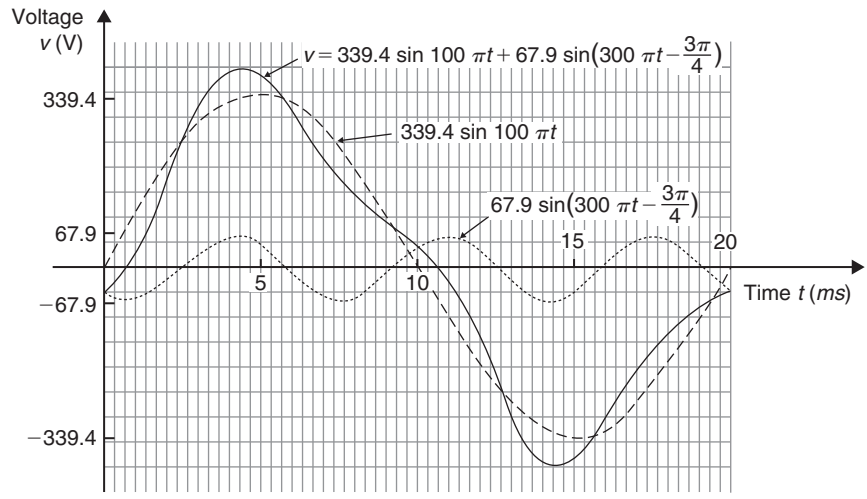

Figure 15.36

the complex waveform representing voltage is produced as shown.

Now try the following Practice Exercise

Practice Exercise 71 Harmonic synthesis with complex waveforms (Answers on page 865)

1. A complex current waveform i comprises a fundamental current of 50 A rms and frequency 100 Hz, together with a 24% third harmonic, both being in phase with each other at zero time. (a) Write down an expression to represent current i. (b) Sketch the complex waveform of current using harmonic synthesis over one cycle of the fundamental.

2. A complex voltage waveform v comprises of a 212.1 V rms fundamental voltage at a frequency of 50 Hz, a 30% second harmonic component lagging by $\pi/2$ rad, and a 10% fourth harmonic component leading by $\pi/3$ rad. (a) Write down an expression to represent voltage v. (b) Sketch the complex voltage waveform using harmonic synthesis over one cycle of the fundamental waveform.

3. A voltage waveform is represented by:

$$v = 20 + 50\sin\omega t + 20\sin(2\omega t - \pi/2) \text{ volts.}$$

Draw the complex waveform over one cycle of the fundamental by using harmonic synthesis.

4. Write down an expression representing a current i having a fundamental component of amplitude 16 A and frequency 1 kHz, together with its third and fifth harmonics being respectively one-fifth and one-tenth the amplitude of the fundamental, all components being in phase at zero time. Sketch the complex current waveform for one cycle of the fundamental using harmonic synthesis.

5. A voltage waveform is described by

$$v = 200\sin 377t + 80\sin\left(1131t + \frac{\pi}{4}\right) + 20\sin\left(1885t - \frac{\pi}{3}\right) \text{ volts}$$

Determine (a) the fundamental and harmonic frequencies of the waveform, (b) the percentage third harmonic and (c) the percentage fifth harmonic. Sketch the voltage waveform using harmonic synthesis over one cycle of the fundamental.

For fully worked solutions to each of the problems in Practice Exercises 68 to 71 in this chapter, go to the website:
www.routledge.com/cw/bird

04: Basic Engineering Mathematics, 7th Edition,

- Chapter: **Binary, octal and hexadecimal numbers**

Chapter 38

Binary, octal and hexadecimal numbers

Why it is important to understand: **Binary, octal and hexadecimal number**

There are infinite ways to represent a number. The four commonly associated with modern computers and digital electronics are decimal, binary, octal and hexadecimal. All four number systems are equally capable of representing any number. Furthermore, a number can be perfectly converted between the various number systems without any loss of numeric value. At a first look, it seems like using any number system other than decimal is complicated and unnecessary. However, since the job of electrical and software engineers is to work with digital circuits, engineers require number systems that can best transfer information between the human world and the digital circuit world. Thus the way in which a number is represented can make it easier for the engineer to perceive the meaning of the number as it applies to a digital circuit, i.e. the appropriate number system can actually make things less complicated.

At the end of this chapter you should be able to:

- recognise a binary number
- convert binary to decimal and vice versa
- add binary numbers
- recognise an octal number
- convert decimal to binary via octal and vice versa
- recognise a hexadecimal number
- convert from hexadecimal to decimal and vice versa
- convert from binary to hexadecimal and vice versa

38.1 Introduction

Man's earliest number or counting system was probably developed to help determine how many possessions a person had. As daily activities became more complex, numbers became more important in trade, time, distance and all other phases of human life. Ever since people discovered that it was necessary to count objects, they have been looking for easier ways to do so. The **abacus**, developed by the Chinese, is one of the earliest known calculators; it is still in use in some parts of the world. **Blaise Pascal*** invented the first adding

*Who was **Pascal**? **Blaise Pascal** (19 June 1623–19 August 1662), was a French polymath. A child prodigy educated by his father, Pascal's earliest work was in the natural and applied sciences where he made important contributions to the study of fluids, and clarified the concepts of pressure and vacuum. To find out more go to **www.routledge.com/cw/bird**

Basic Engineering Mathematics. 978-1-138-67370-0, © 2017 John Bird. Published by Taylor & Francis. All rights reserved.

machine in 1642. Twenty years later, an Englishman, **Sir Samuel Morland***, developed a more compact device that could multiply, add and subtract. About 1672, **Gottfried Wilhelm Leibniz*** perfected a machine that could perform all the basic operations (add, subtract, multiply, divide), as well as extract the square root. Modern electronic digital computers still use Leibniz's principles.

Computers are now employed wherever repeated calculations or the processing of huge amounts of data is needed. The greatest applications are found in the military, scientific and commercial fields. They have applications that range from mail sorting, and engineering design, to the identification and destruction of enemy targets. The advantages of digital computers include speed, accuracy and man-power savings. Often computers are able to take over routine jobs and release personnel for more important work that cannot be handled by a computer. People and computers do not normally speak the same language. Methods of translating information into forms that are understandable and usable to both are necessary. Humans generally speak in words and numbers expressed in the decimal number system, while computers only understand coded electronic pulses that represent digital information.

All data in modern computers is stored as series of **bits**, a bit being a **bi**nary digi**t**, and can have one of two values, the numbers 0 and 1. The most basic form of representing computer data is to represent a piece of data as a string of '1's and '0's, one for each bit. This is called a **binary** or base-2 number.

Because binary notation requires so many bits to represent relatively small numbers, two further compact notations are often used, called **octal** and **hexadecimal**. Computer programmers who design sequences of number codes instructing a computer what to do, would have a very difficult task if they were forced to work with nothing but long strings of '1's and '0's, the 'native language' of any digital circuit.

Octal notation represents data as base-8 numbers with each digit in an octal number representing three bits. Similarly, hexadecimal notation uses base-16 numbers, representing four bits with each digit. Octal numbers use only the digits 0–7, while hexadecimal numbers use all ten base-10 digits (0–9) and the letters A–F (representing the numbers 10–15).

This chapter explains how to convert between the decimal, binary, octal and hexadecimal systems.

*Who was **Morland**? **Sir Samuel Morland, 1st Baronet** (1625–1695), was an English academic, diplomat, spy, inventor and mathematician of the 17th century, a polymath credited with early developments in relation to computing, hydraulics and steam power. To find out more go to **www.routledge.com/cw/bird**

*Who was **Leibniz**? See page 375. To find out more go to **www.routledge.com/cw/bird**

38.2 Binary numbers

The system of numbers in everyday use is the **denary** or **decimal** system of numbers, using the digits 0 to 9. It has ten different digits (0, 1, 2, 3, 4, 5, 6, 7, 8 and 9) and is said to have a **radix** or **base** of 10.

The **binary** system of numbers has a radix of 2 and uses only the digits 0 and 1.

(a) Conversion of binary to decimal

The decimal number 234.5 is equivalent to

$$2 \times 10^2 + 3 \times 10^1 + 4 \times 10^0 + 5 \times 10^{-1}$$

In the binary system of numbers, the base is 2, so 1101.1 is equivalent to:

$$1 \times 2^3 + 1 \times 2^2 + 0 \times 2^1 + 1 \times 2^0 + 1 \times 2^{-1}$$

Thus, the decimal number equivalent to the binary number 1101.1 is:

$$8 + 4 + 0 + 1 + \frac{1}{2} \text{ that is } 13.5$$

i.e. $\mathbf{1101.1_2 = 13.5_{10}}$, the suffixes 2 and 10 denoting binary and decimal systems of numbers, respectively.

Problem 1. Convert 1010_2 to a decimal number.

From above:

$$\begin{aligned} 1010_2 &= 1 \times 2^3 + 0 \times 2^2 + 1 \times 2^1 + 0 \times 2^0 \\ &= 8 + 0 + 2 + 0 \\ &= \mathbf{10_{10}} \end{aligned}$$

Problem 2. Convert 11011_2 to a decimal number.

$$\begin{aligned} 11011_2 &= 1 \times 2^4 + 1 \times 2^3 + 0 \times 2^2 + 1 \times 2^1 + 1 \times 2^0 \\ &= 16 + 8 + 0 + 2 + 1 \\ &= \mathbf{27_{10}} \end{aligned}$$

Problem 3. Convert 0.1011_2 to a decimal fraction.

$$0.1011_2 = 1\times 2^{-1} + 0\times 2^{-2} + 1\times 2^{-3} + 1\times 2^{-4}$$
$$= 1\times\frac{1}{2} + 0\times\frac{1}{2^2} + 1\times\frac{1}{2^3} + 1\times\frac{1}{2^4}$$
$$= \frac{1}{2} + \frac{1}{8} + \frac{1}{16}$$
$$= 0.5 + 0.125 + 0.0625$$
$$= \mathbf{0.6875_{10}}$$

Problem 4. Convert 101.0101_2 to a decimal number.

$$101.0101_2 = 1\times 2^2 + 0\times 2^1 + 1\times 2^0 + 0\times 2^{-1}$$
$$+ 1\times 2^{-2} + 0\times 2^{-3} + 1\times 2^{-4}$$
$$= 4 + 0 + 1 + 0 + 0.25 + 0 + 0.0625$$
$$= \mathbf{5.3125_{10}}$$

Now try the following Practice Exercise

Practice Exercise 158 Conversion of binary to decimal numbers (answers on page 453)

In Problems 1 to 4, convert the binary numbers given to decimal numbers.

1. (a) 110 (b) 1011 (c) 1110 (d) 1001
2. (a) 10101 (b) 11001 (c) 101101 (d) 110011
3. (a) 101010 (b) 111000 (c) 1000001 (d) 10111000
4. (a) 0.1101 (b) 0.11001 (c) 0.00111 (d) 0.01011
5. (a) 11010.11 (b) 10111.011 (c) 110101.0111 (d) 11010101.10111

(b) Conversion of decimal to binary

An integer decimal number can be converted to a corresponding binary number by repeatedly dividing by 2 and noting the remainder at each stage, as shown below for 39_{10}

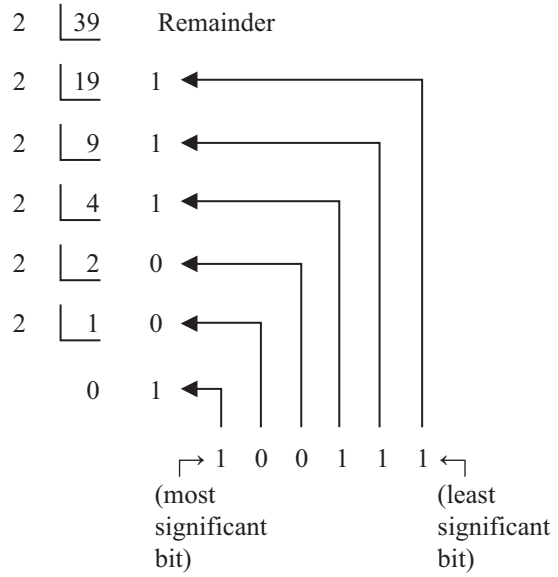

The result is obtained by writing the top digit of the remainder as the least significant bit, (the least significant bit is the one on the right). The bottom bit of the remainder is the most significant bit, i.e. the bit on the left.

Thus, $\mathbf{39_{10} = 100111_2}$

The fractional part of a decimal number can be converted to a binary number by repeatedly multiplying by 2, as shown below for the fraction 0.625

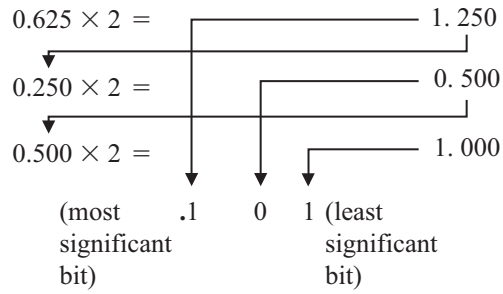

For fractions, the most significant bit of the result is the top bit obtained from the integer part of multiplication by 2. The least significant bit of the result is the bottom bit obtained from the integer part of multiplication by 2.

Thus, $\mathbf{0.625_{10} = 0.101_2}$

Problem 5. Convert 49_{10} to a binary number.

From above, repeatedly dividing by 2 and noting the remainder gives:

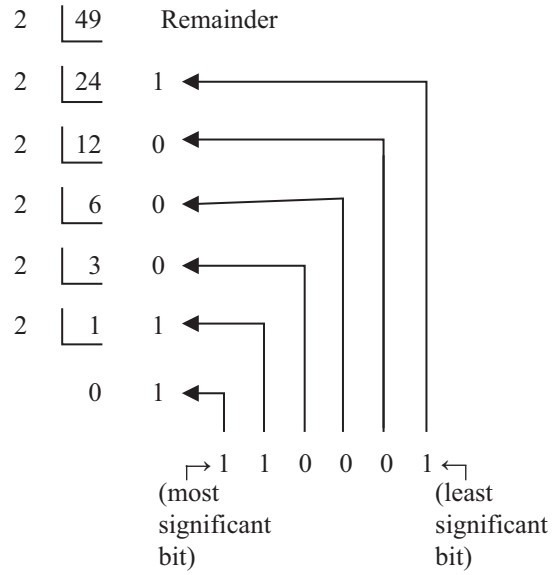

Thus, $\mathbf{49_{10} = 110001_2}$

Problem 6. Convert 56_{10} to a binary number.

The integer part is repeatedly divided by 2, giving:

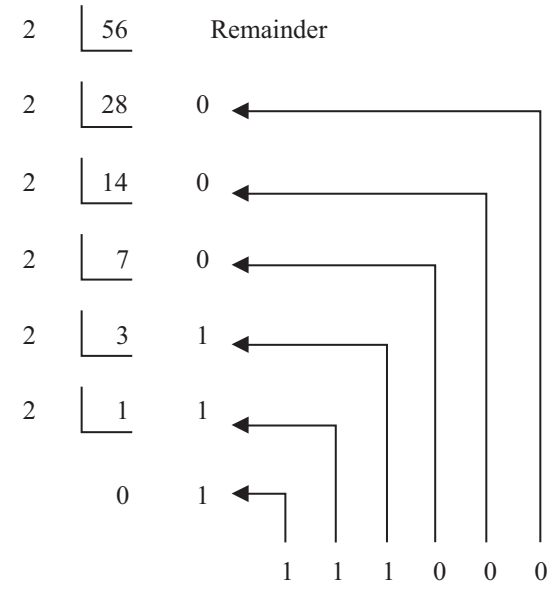

Thus, $\mathbf{56_{10} = 111000_2}$

Problem 7. Convert 0.40625_{10} to a binary number.

From above, repeatedly multiplying by 2 gives:

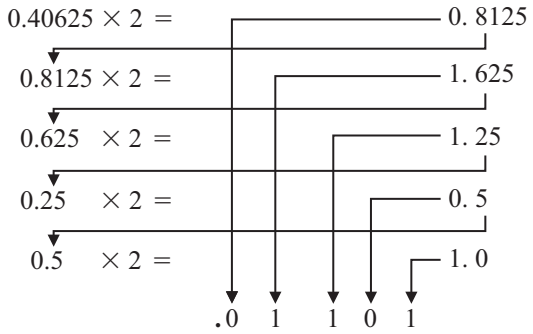

i.e. $\mathbf{0.40625_{10} = 0.01101_2}$

Problem 8. Convert 58.3125_{10} to a binary number.

The integer part is repeatedly divided by 2, giving:

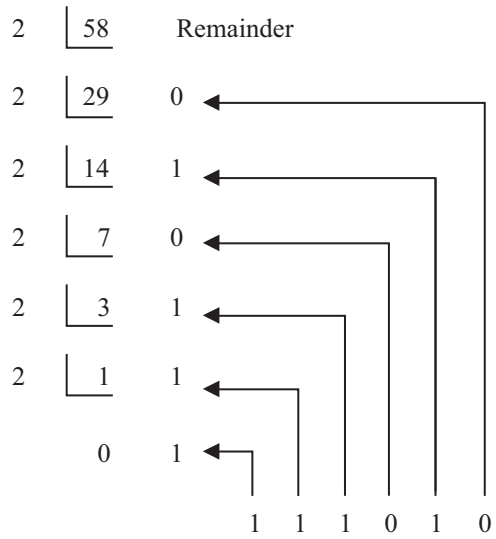

The fractional part is repeatedly multiplied by 2, giving:

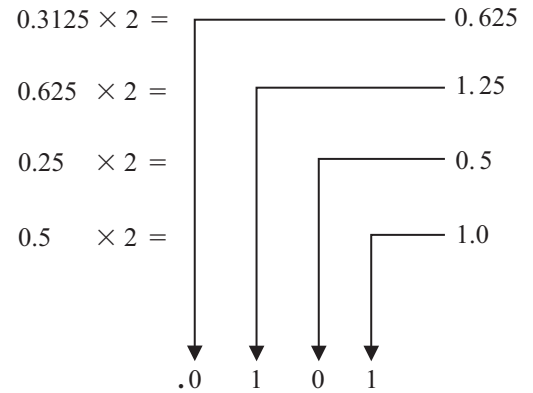

Thus, $\mathbf{58.3125_{10} = 111010.0101_2}$

Now try the following Practice Exercise

Practice Exercise 159 Conversion of decimal to binary numbers (answers on page 453)

In Problems 1 to 5, convert the decimal numbers given to binary numbers.

1. (a) 5 (b) 15 (c) 19 (d) 29
2. (a) 31 (b) 42 (c) 57 (d) 63
3. (a) 47 (b) 60 (c) 73 (d) 84
4. (a) 0.25 (b) 0.21875 (c) 0.28125 (d) 0.59375
5. (a) 47.40625 (b) 30.8125 (c) 53.90625 (d) 61.65625

(c) Binary addition

Binary addition of two/three bits is achieved according to the following rules:

sum	carry
$0+0=0$	0
$0+1=1$	0
$1+0=1$	0
$1+1=0$	1

sum	carry
$0+0+0=0$	0
$0+0+1=1$	0
$0+1+0=1$	0
$0+1+1=0$	1
$1+0+0=1$	0
$1+0+1=0$	1
$1+1+0=0$	1
$1+1+1=1$	1

These rules are demonstrated in the following worked problems.

Problem 9. Perform the binary addition: $1001 + 10110$

$$\begin{array}{r} 1001 \\ +\ 10110 \\ \hline \mathbf{11111} \end{array}$$

Problem 10. Perform the binary addition: $11111 + 10101$

$$\begin{array}{rl} & 11111 \\ + & 10101 \\ \hline \text{sum} & \mathbf{110100} \\ \text{carry} & 11111 \end{array}$$

Problem 11. Perform the binary addition: $1101001 + 1110101$

$$\begin{array}{rl} & 1101001 \\ + & 1110101 \\ \hline \text{sum} & \mathbf{11011110} \\ \text{carry} & 11 \quad\ 1 \end{array}$$

Problem 12. Perform the binary addition: $1011101 + 1100001 + 110101$

$$\begin{array}{rl} & 1011101 \\ & 1100001 \\ + & 110101 \\ \hline \text{sum} & \mathbf{11110011} \\ \text{carry} & 11111\ 1 \end{array}$$

Now try the following Practice Exercise

Practice Exercise 160 Binary addition (answers on page 453)

Perform the following binary additions:

1. $10 + 11$
2. $101 + 110$
3. $1101 + 111$
4. $1111 + 11101$
5. $110111 + 10001$
6. $10000101 + 10000101$
7. $11101100 + 111001011$
8. $110011010 + 11100011$
9. $10110 + 1011 + 11011$
10. $111 + 10101 + 11011$
11. $1101 + 1001 + 11101$
12. $100011 + 11101 + 101110$

38.3 Octal numbers

For decimal integers containing several digits, repeatedly dividing by 2 can be a lengthy process. In this case, it is usually easier to convert a decimal number to a binary number via the octal system of numbers. This system has a radix of 8, using the digits 0, 1, 2, 3, 4,

5, 6 and 7. The decimal number equivalent to the octal number $\mathbf{4317_8}$ is:

$$4 \times 8^3 + 3 \times 8^2 + 1 \times 8^1 + 7 \times 8^0$$

i.e. $$4 \times 512 + 3 \times 64 + 1 \times 8 + 7 \times 1 = \mathbf{2255_{10}}$$

An integer decimal number can be converted to a corresponding octal number by repeatedly dividing by 8 and noting the remainder at each stage, as shown below for 493_{10}

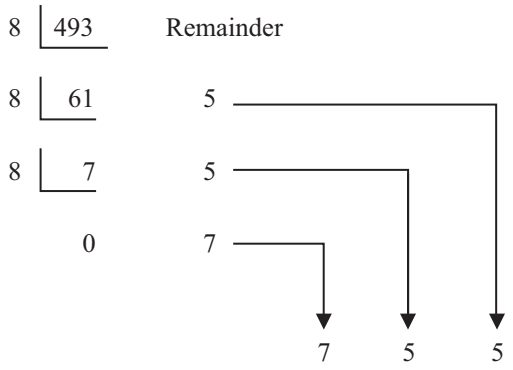

Thus, $$\mathbf{493_{10} = 755_8}$$

The fractional part of a decimal number can be converted to an octal number by repeatedly multiplying by 8, as shown below for the fraction 0.4375_{10}

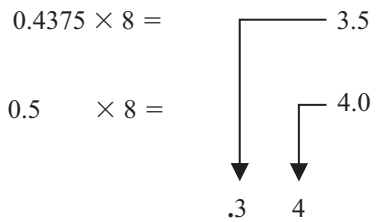

For fractions, the most significant bit is the top integer obtained by multiplication of the decimal fraction by 8, thus,

$$\mathbf{0.4375_{10} = 0.34_8}$$

The natural binary code for digits 0 to 7 is shown in Table 38.1, and an octal number can be converted to a binary number by writing down the three bits corresponding to the octal digit.

Table 38.1

Octal digit	Natural binary number
0	000
1	001
2	010
3	011
4	100
5	101
6	110
7	111

Thus, $$\mathbf{437_8 = 100\ 011\ 111_2}$$

and $$\mathbf{26.35_8 = 010\ 110.011\ 101_2}$$

The '0' on the extreme left does not signify anything, thus

$$\mathbf{26.35_8 = 10\ 110.011\ 101_2}$$

Conversion of decimal to binary via octal is demonstrated in the following worked problems.

Problem 13. Convert 3714_{10} to a binary number via octal.

Dividing repeatedly by 8, and noting the remainder gives:

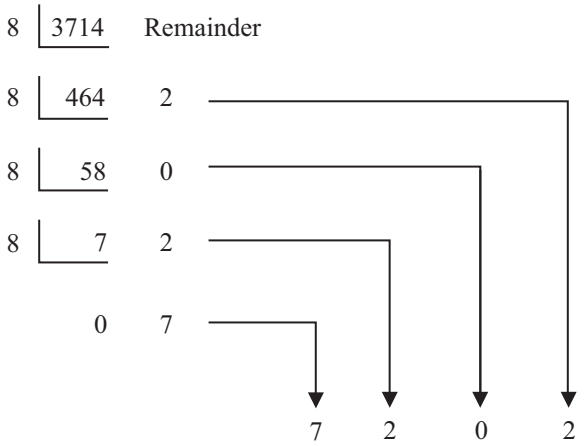

From Table 38.1, $7202_8 = 111\ 010\ 000\ 010_2$

i.e. $$\mathbf{3714_{10} = 111\ 010\ 000\ 010_2}$$

Problem 14. Convert 0.59375_{10} to a binary number via octal.

Multiplying repeatedly by 8, and noting the integer values, gives:

$0.59375 \times 8 = 4.75$

$0.75 \times 8 = 6.00$

$.4\ 6$

Thus, $0.59375_{10} = 0.46_8$

From Table 38.1, $0.46_8 = 0.100\ 110_2$

i.e. $\mathbf{0.59375_{10} = 0.100\ 11_2}$

Problem 15. Convert 5613.90625_{10} to a binary number via octal.

The integer part is repeatedly divided by 8, noting the remainder, giving:

		Remainder
8	5613	
8	701	5
8	87	5
8	10	7
8	1	2
	0	1

1 2 7 5 5

This octal number is converted to a binary number (see Table 38.1)

$12755_8 = 001\ 010\ 111\ 101\ 101_2$

i.e. $5613_{10} = 1\ 010\ 111\ 101\ 101_2$

The fractional part is repeatedly multiplied by 8, and noting the integer part, giving:

$0.90625 \times 8 = 7.25$

$0.25 \times 8 = 2.00$

$.7\ 2$

This octal fraction is converted to a binary number (see Table 38.1)

$0.72_8 = 0.111\ 010_2$

i.e. $0.90625_{10} = 0.111\ 01_2$

Thus, $\mathbf{5613.90625_{10} = 1\ 010\ 111\ 101\ 101.111\ 01_2}$

Problem 16. Convert $11\ 110\ 011.100\ 01_2$ to a decimal number via octal.

Grouping the binary number in three's from the binary point gives:

$011\ 110\ 011.100\ 010_2$

Using Table 38.1 to convert this binary number to an octal number gives:

363.42_8

and $363.42_8 = 3 \times 8^2 + 6 \times 8^1 + 3 \times 8^0 + 4 \times 8^{-1} + 2 \times 8^{-2}$

$= 192 + 48 + 3 + 0.5 + 0.03125_{10}$

$= 243.53125_{10}$

i.e. $\mathbf{11\ 110\ 011.100\ 01_2 = 363.42_8 = 243.53125_{10}}$

Now try the following Practice Exercise

Practice Exercise 161 Conversion between decimal and binary numbers via octal (answers on page 453)

In Problems 1 to 3, convert the decimal numbers given to binary numbers, via octal.

1. (a) 343 (b) 572 (c) 1265
2. (a) 0.46875 (b) 0.6875 (c) 0.71875
3. (a) 247.09375 (b) 514.4375 (c) 1716.78125
4. Convert the following binary numbers to decimal numbers via octal:

   (a) 111.011 1 (b) 101 001.01
   (c) 1 110 011 011 010.001 1

38.4 Hexadecimal numbers

The hexadecimal system is particularly important in computer programming, since four bits (each consisting of a one or zero) can be succinctly expressed using a single hexadecimal digit. Two hexadecimal digits represent numbers from 0 to 255, a common range used, for example, to specify colours. Thus, in the HTML language of the web, colours are specified using three pairs of hexadecimal digits RRGGBB, where RR is the amount of red, GG the amount of green, and BB the amount of blue.

A **hexadecimal numbering system** has a radix of 16 and uses the following 16 distinct digits:

0, 1, 2, 3, 4, 5, 6, 7, 8, 9, A, B, C, D, E and F

'A' corresponds to 10 in the denary system, B to 11, C to 12, and so on.

(a) Converting from hexadecimal to decimal

For example, $1A_{16} = 1 \times 16^1 + A \times 16^0$
$= 1 \times 16^1 + 10 \times 1$
$= 16 + 10 = 26$

i.e. $\mathbf{1A_{16} = 26_{10}}$

Similarly, $\mathbf{2E_{16}} = 2 \times 16^1 + E \times 16^0$
$= 2 \times 16^1 + 14 \times 16^0$
$= 32 + 14 = \mathbf{46_{10}}$

and $\mathbf{1BF_{16}} = 1 \times 16^2 + B \times 16^1 + F \times 16^0$
$= 1 \times 16^2 + 11 \times 16^1 + 15 \times 16^0$
$= 256 + 176 + 15 = \mathbf{447_{10}}$

Table 38.2 compares decimal, binary, octal and hexadecimal numbers and shows, for example, that

$$23_{10} = 10111_2 = 27_8 = 17_{16}$$

Problem 17. Convert the following hexadecimal numbers into their decimal equivalents:
(a) $7A_{16}$ (b) $3F_{16}$

(a) $7A_{16} = 7 \times 16^1 + A \times 16^0 = 7 \times 16 + 10 \times 1$
$= 112 + 10 = 122$
Thus, $\mathbf{7A_{16} = 122_{10}}$

(b) $3F_{16} = 3 \times 16^1 + F \times 16^0 = 3 \times 16 + 15 \times 1$
$= 48 + 15 = 63$
Thus, $\mathbf{3F_{16} = 63_{10}}$

Problem 18. Convert the following hexadecimal numbers into their decimal equivalents:
(a) $C9_{16}$ (b) BD_{16}

Table 38.2

Decimal	Binary	Octal	Hexadecimal
0	0000	0	0
1	0001	1	1
2	0010	2	2
3	0011	3	3
4	0100	4	4
5	0101	5	5
6	0110	6	6
7	0111	7	7
8	1000	10	8
9	1001	11	9
10	1010	12	A
11	1011	13	B
12	1100	14	C
13	1101	15	D
14	1110	16	E
15	1111	17	F
16	10000	20	10
17	10001	21	11
18	10010	22	12
19	10011	23	13
20	10100	24	14
21	10101	25	15
22	10110	26	16
23	10111	27	17
24	11000	30	18
25	11001	31	19
26	11010	32	1A
27	11011	33	1B
28	11100	34	1C
29	11101	35	1D
30	11110	36	1E
31	11111	37	1F
32	100000	40	20

(a) $C9_{16} = C \times 16^1 + 9 \times 16^0 = 12 \times 16 + 9 \times 1$
$= 192 + 9 = 201$
Thus, $\mathbf{C9_{16} = 201_{10}}$

(b) $BD_{16} = B \times 16^1 + D \times 16^0 = 11 \times 16 + 13 \times 1$
$= 176 + 13 = 189$
Thus, $\mathbf{BD_{16} = 189_{10}}$

Problem 19. Convert $1A4E_{16}$ into a decimal number.

$$1A4E_{16} = 1 \times 16^3 + A \times 16^2 + 4 \times 16^1 + E \times 16^0$$
$$= 1 \times 16^3 + 10 \times 16^2 + 4 \times 16^1 + 14 \times 16^0$$
$$= 1 \times 4096 + 10 \times 256 + 4 \times 16 + 14 \times 1$$
$$= 4096 + 2560 + 64 + 14 = 6734$$

Thus, $\mathbf{1A4E_{16} = 6734_{10}}$

(b) Converting from decimal to hexadecimal

This is achieved by repeatedly dividing by 16 and noting the remainder at each stage, as shown below for 26_{10}

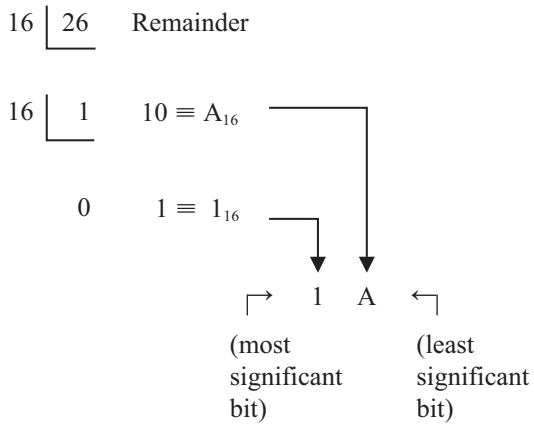

Hence, $\mathbf{26_{10} = 1A_{16}}$

Similarly, for 446_{10}

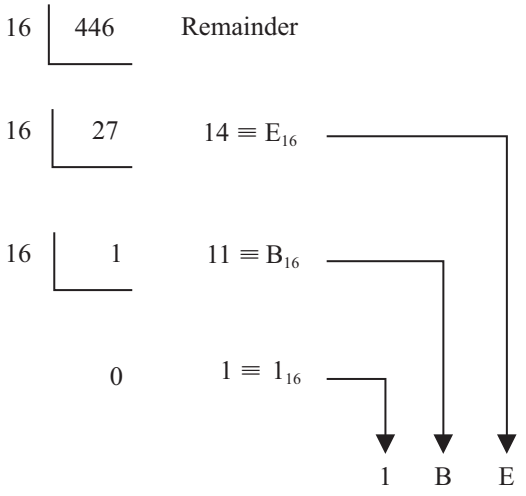

Thus, $\mathbf{446_{10} = 1BE_{16}}$

Problem 20. Convert the following decimal numbers into their hexadecimal equivalents:
(a) 39_{10} (b) 107_{10}

(a)

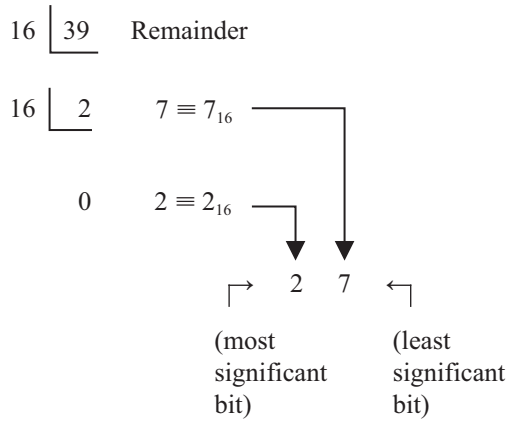

Hence, $\mathbf{39_{10} = 27_{16}}$

(b)

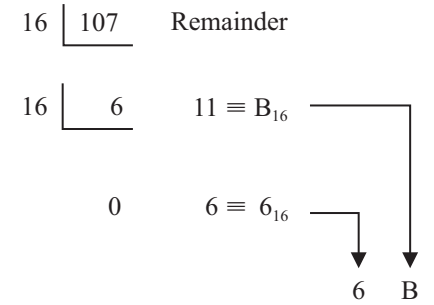

Hence, $\mathbf{107_{10} = 6B_{16}}$

Problem 21. Convert the following decimal numbers into their hexadecimal equivalents:
(a) 164_{10} (b) 239_{10}

(a)

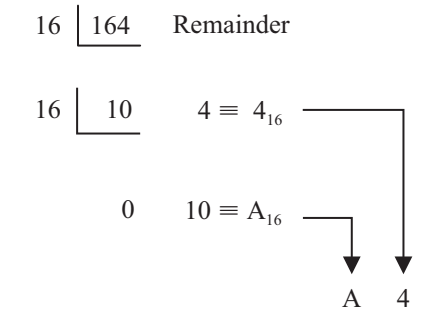

Hence, $\mathbf{164_{10} = A4_{16}}$

(b)

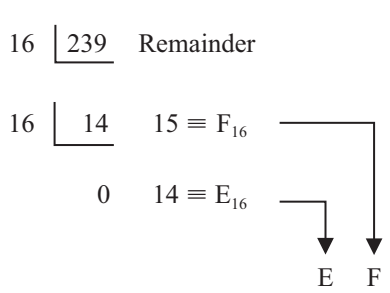

Hence, $\mathbf{239_{10} = EF_{16}}$

Now try the following Practice Exercise

Practice Exercise 162 Hexadecimal numbers (answers on page 453)

In Problems 1 to 4, convert the given hexadecimal numbers into their decimal equivalents.

1. $E7_{16}$ 2. $2C_{16}$ 3. 98_{16} 4. $2F1_{16}$

In Problems 5 to 8, convert the given decimal numbers into their hexadecimal equivalents.

5. 54_{10} 6. 200_{10} 7. 91_{10} 8. 238_{10}

(c) Converting from binary to hexadecimal

The binary bits are arranged in groups of four, starting from right to left, and a hexadecimal symbol is assigned to each group. For example, the binary number 1110011110101001

is initially grouped in fours as: 1110 0111 1010 1001

and a hexadecimal symbol assigned to each group as: E 7 A 9 from Table 38.2

Hence, $\mathbf{1110011110101001_2 = E7A9_{16}}$

Problem 22. Convert the following binary numbers into their hexadecimal equivalents:
(a) 11010110_2 (b) 1100111_2

(a) Grouping bits in fours from the right gives: 1101 0110

and assigning hexadecimal symbols to each group gives: D 6 from Table 38.2

Thus, $\mathbf{11010110_2 = D6_{16}}$

(b) Grouping bits in fours from the right gives: 0110 0111

and assigning hexadecimal symbols to each group gives: 6 7 from Table 38.2

Thus, $\mathbf{1100111_2 = 67_{16}}$

Problem 23. Convert the following binary numbers into their hexadecimal equivalents:
(a) 11001111_2 (b) 110011110_2

(a) Grouping bits in fours from the right gives: 1100 1111

and assigning hexadecimal symbols to each group gives: C F from Table 38.2

Thus, $\mathbf{11001111_2 = CF_{16}}$

(b) Grouping bits in fours from the right gives: 0001 1001 1110

and assigning hexadecimal symbols to each group gives: 1 9 E from Table 38.2

Thus, $\mathbf{110011110_2 = 19E_{16}}$

(d) Converting from hexadecimal to binary

The above procedure is reversed, thus, for example,

$6CF3_{16} = 0110\ 1100\ 1111\ 0011$ from Table 38.2

i.e. $\mathbf{6CF3_{16} = 110110011110011_2}$

Problem 24. Convert the following hexadecimal numbers into their binary equivalents:
(a) $3F_{16}$ (b) $A6_{16}$

(a) Spacing out hexadecimal digits gives: 3 F

and converting each into binary gives: 0011 1111 from Table 38.2

Thus, $\mathbf{3F_{16} = 111111_2}$

(b) Spacing out hexadecimal digits gives: A 6

and converting each into binary gives: 1010 0110 from Table 38.2

Thus, $\mathbf{A6_{16} = 10100110_2}$

Problem 25. Convert the following hexadecimal numbers into their binary equivalents:
(a) $7B_{16}$ (b) $17D_{16}$

(a) Spacing out hexadecimal digits gives: 7 B
and converting each into binary gives: 0111 1011 from Table 38.2

Thus, $\mathbf{7B_{16} = 1111011_2}$

(b) Spacing out hexadecimal digits gives: 1 7 D
and converting each into binary gives: 0001 0111 1101 from Table 38.2

Thus, $\mathbf{17D_{16} = 101111101_2}$

Now try the following Practice Exercise

Practice Exercise 163 Hexadecimal numbers (answers on page 453)

In Problems 1 to 4, convert the given binary numbers into their hexadecimal equivalents.

1. 11010111_2
2. 11101010_2
3. 10001011_2
4. 10100101_2

In Problems 5 to 8, convert the given hexadecimal numbers into their binary equivalents.

5. 37_{16}
6. ED_{16}
7. $9F_{16}$
8. $A21_{16}$

For fully worked solutions to each of the problems in Practice Exercises 158 to 163 in this chapter, go to the website:
www.routledge.com/cw/bird

COMPANION @ WEBSITE

05: Higher Engineering Mathematics, 8th Edition,

- Chapter: **Applications of integration**

Chapter 32

Some applications of integration

Why it is important to understand: **Some applications of integration**

Engineering is all about problem solving and many problems in engineering can be solved using integral calculus. One important application is to find the area bounded by a curve; often such an area can have a physical significance like the work done by a motor, or the distance travelled by a vehicle. Other examples can involve position, velocity, force, charge density, resistivity and current density. Electrical currents and voltages often vary with time and engineers may wish to know the average or mean value of such a current or voltage over some particular time interval. An associated quantity is the root mean square (rms) value of a current which is used, for example, in the calculation of the power dissipated by a resistor. Mean and rms values are required with alternating currents and voltages, pressure of sound waves, and much more. Revolving a plane figure about an axis generates a volume, called a solid of revolution, and integration may be used to calculate such a volume. There are many applications in engineering, and particularly in manufacturing. Centroids of basic shapes can be intuitive – such as the centre of a circle; centroids of more complex shapes can be found using integral calculus – as long as the area, volume or line of an object can be described by a mathematical equation. Centroids are of considerable importance in manufacturing, and in mechanical, civil and structural design engineering. The second moment of area is a property of a cross-section that can be used to predict the resistance of a beam to bending and deflection around an axis that lies in the cross-sectional plane. The stress in, and deflection of, a beam under load depends not only on the load but also on the geometry of the beam's cross-section; larger values of second moment cause smaller values of stress and deflection. This is why beams with larger second moments of area, such as I-beams, are used in building construction in preference to other beams with the same cross-sectional area. The second moment of area has applications in many scientific disciplines including fluid mechanics, engineering mechanics, and biomechanics – for example to study the structural properties of bone during bending. The static roll stability of a ship depends on the second moment of area of the waterline section – short fat ships are stable, long thin ones are not. It is clear that calculations involving areas, mean and rms values, volumes, centroids and second moment of area are very important in many areas of engineering.

At the end of this chapter, you should be able to:

- calculate areas under and between curves
- determine the mean and rms value of a function over a given range
- determine the volume of a solid of revolution between given limits
- determine the centroid of an area between a curve and given axes
- define and use the theorem of Pappus to determine the centroid of an area
- determine the second moment of area and radius of gyration of regular sections and composite areas

Higher Engineering Mathematics. 978-1-138-67357-1, © 2017 John Bird. Published by Taylor & Francis. All rights reserved.

32.1 Introduction

There are a number of applications of integral calculus in engineering. The determination of areas, mean and rms values, volumes, centroids and second moments of area and radius of gyration are included in this chapter.

32.2 Areas under and between curves

In Fig. 32.1,

$$\text{total shaded area} = \int_a^b f(x)\mathrm{d}x - \int_b^c f(x)\mathrm{d}x + \int_c^d f(x)\mathrm{d}x$$

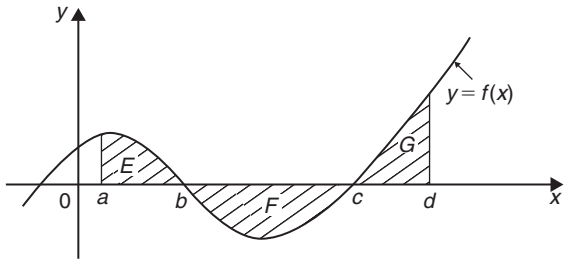

Figure 32.1

Problem 1. Determine the area between the curve $y = x^3 - 2x^2 - 8x$ and the x-axis.

$y = x^3 - 2x^2 - 8x = x(x^2 - 2x - 8) = x(x+2)(x-4)$
When $y = 0$, $x = 0$ or $(x+2) = 0$ or $(x-4) = 0$, i.e. when $y = 0$, $x = 0$ or -2 or 4, which means that the curve crosses the x-axis at 0, -2, and 4. Since the curve is a continuous function, only one other co-ordinate value needs to be calculated before a sketch of the curve can be produced. When $x = 1$, $y = -9$, showing that the part of the curve between $x = 0$ and $x = 4$ is negative. A sketch of $y = x^3 - 2x^2 - 8x$ is shown in Fig. 32.2. (Another method of sketching Fig. 32.2 would have been to draw up a table of values.)

Shaded area

$$= \int_{-2}^{0} (x^3 - 2x^2 - 8x)\mathrm{d}x - \int_{0}^{4} (x^3 - 2x^2 - 8x)\mathrm{d}x$$

$$= \left[\frac{x^4}{4} - \frac{2x^3}{3} - \frac{8x^2}{2}\right]_{-2}^{0} - \left[\frac{x^4}{4} - \frac{2x^3}{3} - \frac{8x^2}{2}\right]_{0}^{4}$$

$$= \left(6\frac{2}{3}\right) - \left(-42\frac{2}{3}\right) = \mathbf{49\frac{1}{3}}\ \textbf{square units}$$

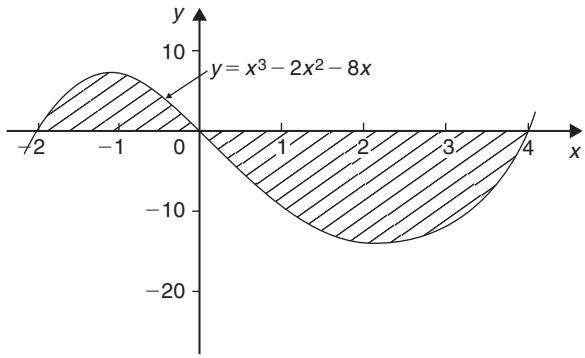

Figure 32.2

Problem 2. Determine the area enclosed between the curves $y = x^2 + 1$ and $y = 7 - x$.

At the points of intersection the curves are equal. Thus, equating the y values of each curve gives:

$$x^2 + 1 = 7 - x$$

from which, $x^2 + x - 6 = 0$

Factorising gives $(x-2)(x+3) = 0$

from which $x = 2$ and $x = -3$

By firstly determining the points of intersection the range of x-values has been found. Tables of values are produced as shown below.

x	-3	-2	-1	0	1	2
$y = x^2 + 1$	10	5	2	1	2	5

x	-3	0	2
$y = 7 - x$	10	7	5

A sketch of the two curves is shown in Fig. 32.3.

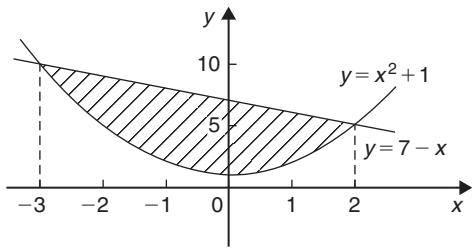

Figure 32.3

$$\text{Shaded area} = \int_{-3}^{2}(7-x)\,dx - \int_{-3}^{2}(x^2+1)\,dx$$

$$= \int_{-3}^{2}[(7-x)-(x^2+1)]\,dx$$

$$= \int_{-3}^{2}(6-x-x^2)\,dx$$

$$= \left[6x - \frac{x^2}{2} - \frac{x^3}{3}\right]_{-3}^{2}$$

$$= \left(12 - 2 - \frac{8}{3}\right) - \left(-18 - \frac{9}{2} + 9\right)$$

$$= \left(7\frac{1}{3}\right) - \left(-13\frac{1}{2}\right)$$

$$= \mathbf{20\frac{5}{6}\ \text{square units}}$$

Problem 3. Determine by integration the area bounded by the three straight lines $y = 4 - x$, $y = 3x$ and $3y = x$

Each of the straight lines are shown sketched in Fig. 32.4.

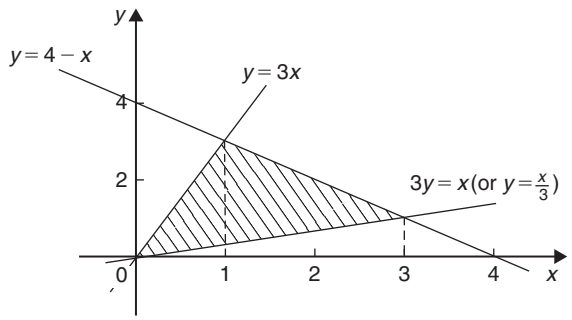

Figure 32.4

Shaded area

$$= \int_0^1 \left(3x - \frac{x}{3}\right)dx + \int_1^3 \left[(4-x) - \frac{x}{3}\right]dx$$

$$= \left[\frac{3x^2}{2} - \frac{x^2}{6}\right]_0^1 + \left[4x - \frac{x^2}{2} - \frac{x^2}{6}\right]_1^3$$

$$= \left[\left(\frac{3}{2} - \frac{1}{6}\right) - (0)\right] + \left[\left(12 - \frac{9}{2} - \frac{9}{6}\right) - \left(4 - \frac{1}{2} - \frac{1}{6}\right)\right]$$

$$= \left(1\frac{1}{3}\right) + \left(6 - 3\frac{1}{3}\right) = \mathbf{4\ \text{square units}}$$

Now try the following Practice Exercise

Practice Exercise 142 Areas under and between curves (Answers on page 877)

1. Find the area enclosed by the curve $y = 4\cos 3x$, the x-axis and ordinates $x = 0$ and $x = \frac{\pi}{6}$
2. Sketch the curves $y = x^2 + 3$ and $y = 7 - 3x$ and determine the area enclosed by them.
3. Determine the area enclosed by the three straight lines $y = 3x$, $2y = x$ and $y + 2x = 5$

32.3 Mean and rms values

With reference to Fig. 32.5,

$$\textbf{mean value, } \bar{y} = \frac{1}{b-a}\int_a^b y\,dx$$

and

$$\textbf{rms value} = \sqrt{\left\{\frac{1}{b-a}\int_a^b y^2\,dx\right\}}$$

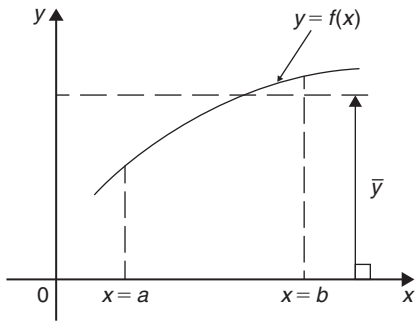

Figure 32.5

Problem 4. A sinusoidal voltage $v = 100\sin\omega t$ volts. Use integration to determine over half a cycle (a) the mean value, and (b) the rms value.

(a) Half a cycle means the limits are 0 to π radians.

$$\text{Mean value, } \bar{y} = \frac{1}{\pi - 0}\int_0^{\pi} v\,d(\omega t)$$

$$= \frac{1}{\pi}\int_0^{\pi} 100\sin\omega t\,d(\omega t)$$

$$= \frac{100}{\pi}[-\cos\omega t]_0^{\pi}$$
$$= \frac{100}{\pi}[(-\cos\pi) - (-\cos 0)]$$
$$= \frac{100}{\pi}[(+1) - (-1)] = \frac{200}{\pi}$$
$$= \mathbf{63.66\ volts}$$

[Note that for a sine wave,

$$\textbf{mean value} = \frac{\mathbf{2}}{\boldsymbol{\pi}} \times \textbf{maximum value}$$

In this case, mean value $= \frac{2}{\pi} \times 100 = 63.66\,\text{V}$]

(b) rms value

$$= \sqrt{\left\{\frac{1}{\pi - 0}\int_0^{\pi} v^2\,\mathrm{d}(\omega t)\right\}}$$
$$= \sqrt{\left\{\frac{1}{\pi}\int_0^{\pi} (100\sin\omega t)^2\,\mathrm{d}(\omega t)\right\}}$$
$$= \sqrt{\left\{\frac{10\,000}{\pi}\int_0^{\pi} \sin^2\omega t\,\mathrm{d}(\omega t)\right\}}$$

which is not a 'standard' integral.

It is shown in Chapter 19 that $\cos 2A = 1 - 2\sin^2 A$ and this formula is used whenever $\sin^2 A$ needs to be integrated.

Rearranging $\cos 2A = 1 - 2\sin^2 A$ gives

$$\sin^2 A = \frac{1}{2}(1 - \cos 2A)$$

Hence $\sqrt{\left\{\frac{10\,000}{\pi}\int_0^{\pi} \sin^2\omega t\,\mathrm{d}(\omega t)\right\}}$

$$= \sqrt{\left\{\frac{10\,000}{\pi}\int_0^{\pi} \frac{1}{2}(1 - \cos 2\omega t)\,\mathrm{d}(\omega t)\right\}}$$
$$= \sqrt{\left\{\frac{10\,000}{\pi}\frac{1}{2}\left[\omega t - \frac{\sin 2\omega t}{2}\right]_0^{\pi}\right\}}$$
$$= \sqrt{\left\{\frac{10\,000}{\pi}\frac{1}{2}\left[\left(\pi - \frac{\sin 2\pi}{2}\right) - \left(0 - \frac{\sin 0}{2}\right)\right]\right\}}$$
$$= \sqrt{\left\{\frac{10\,000}{\pi}\frac{1}{2}[\pi]\right\}}$$
$$= \sqrt{\left\{\frac{10\,000}{2}\right\}} = \frac{100}{\sqrt{2}} = \mathbf{70.71\ volts}$$

[Note that for a sine wave,

$$\textbf{rms value} = \frac{\mathbf{1}}{\sqrt{\mathbf{2}}} \times \textbf{maximum value}.$$

In this case,

$$\text{rms value} = \frac{1}{\sqrt{2}} \times 100 = 70.71\,\text{V}]$$

Now try the following Practice Exercise

Practice Exercise 143 Mean and rms values (Answers on page 877)

1. The vertical height h km of a missile varies with the horizontal distance d km, and is given by $h = 4d - d^2$. Determine the mean height of the missile from $d = 0$ to $d = 4$ km.
2. The distances of points y from the mean value of a frequency distribution are related to the variate x by the equation $y = x + \frac{1}{x}$. Determine the standard deviation (i.e. the rms value), correct to 4 significant figures for values of x from 1 to 2
3. A current $i = 25\sin 100\pi t$ mA flows in an electrical circuit. Determine, using integral calculus, its mean and rms values each correct to 2 decimal places over the range $t = 0$ to $t = 10$ ms.
4. A wave is defined by the equation:

   $$v = E_1\sin\omega t + E_3\sin 3\omega t$$

   where E_1, E_3 and ω are constants. Determine the rms value of v over the interval $0 \le t \le \frac{\pi}{\omega}$

32.4 Volumes of solids of revolution

With reference to Fig. 32.6, the volume of revolution V obtained by rotating area A through one revolution

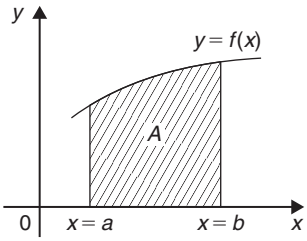

Figure 32.6

about the x-axis is given by:

$$V = \int_a^b \pi y^2 \, dx$$

If a curve $x = f(y)$ is rotated 360° about the y-axis between the limits $y = c$ and $y = d$ then the volume generated, V, is given by:

$$V = \int_c^d \pi x^2 \, dy$$

Problem 5. The curve $y = x^2 + 4$ is rotated one revolution about the x-axis between the limits $x = 1$ and $x = 4$. Determine the volume of solid of revolution produced.

Revolving the shaded area shown in Fig. 32.7 360° about the x-axis produces a solid of revolution given by:

$$\text{Volume} = \int_1^4 \pi y^2 \, dx = \int_1^4 \pi (x^2 + 4)^2 \, dx$$

$$= \int_1^4 \pi (x^4 + 8x^2 + 16) \, dx$$

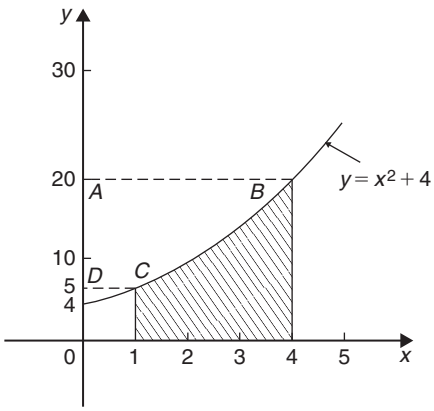

Figure 32.7

$$= \pi \left[\frac{x^5}{5} + \frac{8x^3}{3} + 16x \right]_1^4$$

$$= \pi [(204.8 + 170.67 + 64) - (0.2 + 2.67 + 16)]$$

$$= \mathbf{420.6\pi \text{ cubic units}}$$

Problem 6. Determine the area enclosed by the two curves $y = x^2$ and $y^2 = 8x$. If this area is rotated 360° about the x-axis determine the volume of the solid of revolution produced.

At the points of intersection the co-ordinates of the curves are equal. Since $y = x^2$ then $y^2 = x^4$. Hence equating the y^2 values at the points of intersection:

$$x^4 = 8x$$

from which, $x^4 - 8x = 0$

and $x(x^3 - 8) = 0$

Hence, at the points of intersection, $x = 0$ and $x = 2$ When $x = 0$, $y = 0$ and when $x = 2$, $y = 4$. The points of intersection of the curves $y = x^2$ and $y^2 = 8x$ are therefore at (0,0) and (2,4). A sketch is shown in Fig. 32.8. If $y^2 = 8x$ then $y = \sqrt{8x}$

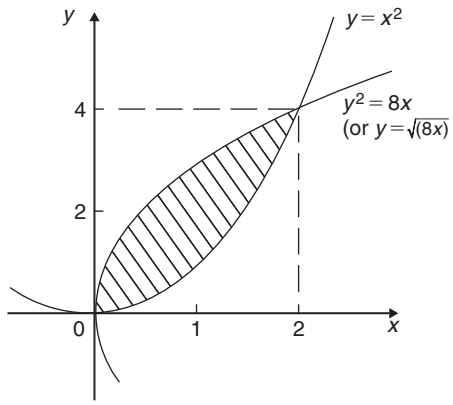

Figure 32.8

Shaded area

$$= \int_0^2 \left(\sqrt{8x} - x^2 \right) dx = \int_0^2 \left(\sqrt{8} \right) x^{\frac{1}{2}} - x^2 \, dx$$

$$= \left[\left(\sqrt{8} \right) \frac{x^{\frac{3}{2}}}{\frac{3}{2}} - \frac{x^3}{3} \right]_0^2 = \left\{ \frac{\sqrt{8}\sqrt{8}}{\frac{3}{2}} - \frac{8}{3} \right\} - \{0\}$$

$$= \frac{16}{3} - \frac{8}{3} = \frac{8}{3} = \mathbf{2\frac{2}{3}\ square\ units}$$

The volume produced by revolving the shaded area about the x-axis is given by:
{(volume produced by revolving $y^2 = 8x$)
$-$ (volume produced by revolving $y = x^2$)}

$$\text{i.e. } \textbf{volume} = \int_0^2 \pi(8x)\mathrm{d}x - \int_0^2 \pi(x^4)\mathrm{d}x$$

$$= \pi\int_0^2 (8x - x^4)\mathrm{d}x = \pi\left[\frac{8x^2}{2} - \frac{x^5}{5}\right]_0^2$$

$$= \pi\left[\left(16 - \frac{32}{5}\right) - (0)\right]$$

$$= \mathbf{9.6\pi\ cubic\ units}$$

Now try the following Practice Exercise

Practice Exercise 144 Volumes (Answers on page 877)

1. The curve $xy = 3$ is revolved one revolution about the x-axis between the limits $x = 2$ and $x = 3$. Determine the volume of the solid produced.
2. The area between $\frac{y}{x^2} = 1$ and $y + x^2 = 8$ is rotated 360° about the x-axis. Find the volume produced.
3. The curve $y = 2x^2 + 3$ is rotated about (a) the x-axis between the limits $x = 0$ and $x = 3$, and (b) the y-axis, between the same limits. Determine the volume generated in each case.
4. The profile of a rotor blade is bounded by the lines $x = 0.2$, $y = 2x$, $y = e^{-x}$, $x = 1$ and the x-axis. The blade thickness t varies linearly with x and is given by: $t = (1.1 - x)\mathrm{K}$, where K is a constant.
   (a) Sketch the rotor blade, labelling the limits.
   (b) Determine, using an iterative method, the value of x, correct to 3 decimal places, where $2x = e^{-x}$
   (c) Calculate the cross-sectional area of the blade, correct to 3 decimal places.
   (d) Calculate the volume of the blade in terms of K, correct to 3 decimal places.

32.5 Centroids

A **lamina** is a thin, flat sheet having uniform thickness. The **centre of gravity** of a lamina is the point where it balances perfectly, i.e. the lamina's **centre of mass**. When dealing with an area (i.e. a lamina of negligible thickness and mass) the term **centre of area** or **centroid** is used for the point where the centre of gravity of a lamina of that shape would lie.
If $\overline{x}$ and $\overline{y}$ denote the co-ordinates of the centroid C of area A of Fig. 32.9, then:

$$\overline{x} = \frac{\int_a^b xy\,\mathrm{d}x}{\int_a^b y\,\mathrm{d}x} \quad \text{and} \quad \overline{y} = \frac{\frac{1}{2}\int_a^b y^2\,\mathrm{d}x}{\int_a^b y\,\mathrm{d}x}$$

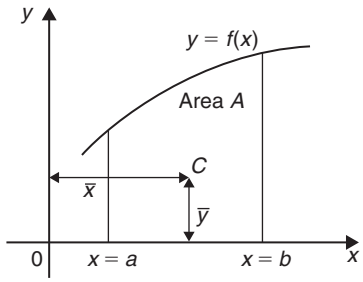

Figure 32.9

Problem 7. Find the position of the centroid of the area bounded by the curve $y = 3x^2$, the x-axis and the ordinates $x = 0$ and $x = 2$

If $(\overline{x}, \overline{y})$ are co-ordinates of the centroid of the given area then:

$$\overline{x} = \frac{\int_0^2 xy\,\mathrm{d}x}{\int_0^2 y\,\mathrm{d}x} = \frac{\int_0^2 x(3x^2)\,\mathrm{d}x}{\int_0^2 3x^2\,\mathrm{d}x}$$

$$= \frac{\int_0^2 3x^3\,\mathrm{d}x}{\int_0^2 3x^2\,\mathrm{d}x} = \frac{\left[\frac{3x^4}{4}\right]_0^2}{[x^3]_0^2}$$

$$= \frac{12}{8} = \mathbf{1.5}$$

$$\overline{y} = \frac{\frac{1}{2}\int_0^2 y^2\,dx}{\int_0^2 y\,dx} = \frac{\frac{1}{2}\int_0^2 (3x^2)^2\,dx}{8}$$

$$= \frac{\frac{1}{2}\int_0^2 9x^4\,dx}{8} = \frac{\frac{9}{2}\left[\frac{x^5}{5}\right]_0^2}{8}$$

$$= \frac{\frac{9}{2}\left(\frac{32}{5}\right)}{8} = \frac{18}{5} = \mathbf{3.6}$$

Hence the centroid lies at (1.5, 3.6)

Problem 8. Determine the co-ordinates of the centroid of the area lying between the curve $y = 5x - x^2$ and the x-axis.

$y = 5x - x^2 = x(5 - x)$. When $y = 0$, $x = 0$ or $x = 5$. Hence the curve cuts the x-axis at 0 and 5 as shown in Fig. 32.10. Let the co-ordinates of the centroid be $(\overline{x}, \overline{y})$ then, by integration,

$$\overline{x} = \frac{\int_0^5 xy\,dx}{\int_0^5 y\,dx} = \frac{\int_0^5 x(5x - x^2)\,dx}{\int_0^5 (5x - x^2)\,dx}$$

$$= \frac{\int_0^5 (5x^2 - x^3)\,dx}{\int_0^5 (5x - x^2)\,dx} = \frac{\left[\frac{5x^3}{3} - \frac{x^4}{4}\right]_0^5}{\left[\frac{5x^2}{2} - \frac{x^3}{3}\right]_0^5}$$

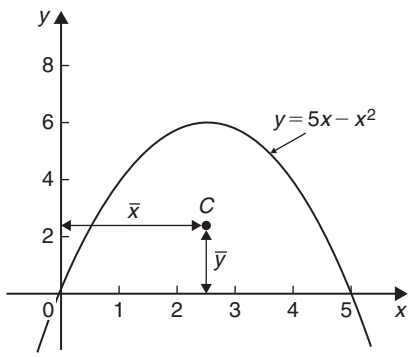

Figure 32.10

$$= \frac{\frac{625}{3} - \frac{625}{4}}{\frac{125}{2} - \frac{125}{3}} = \frac{\frac{625}{12}}{\frac{125}{6}}$$

$$= \left(\frac{625}{12}\right)\left(\frac{6}{125}\right) = \frac{5}{2} = \mathbf{2.5}$$

$$\overline{y} = \frac{\frac{1}{2}\int_0^5 y^2\,dx}{\int_0^5 y\,dx} = \frac{\frac{1}{2}\int_0^5 (5x - x^2)^2\,dx}{\int_0^5 (5x - x^2)\,dx}$$

$$= \frac{\frac{1}{2}\int_0^5 (25x^2 - 10x^3 + x^4)\,dx}{\frac{125}{6}}$$

$$= \frac{\frac{1}{2}\left[\frac{25x^3}{3} - \frac{10x^4}{4} + \frac{x^5}{5}\right]_0^5}{\frac{125}{6}}$$

$$= \frac{\frac{1}{2}\left(\frac{25(125)}{3} - \frac{6250}{4} + 625\right)}{\frac{125}{6}} = \mathbf{2.5}$$

Hence the centroid of the area lies at (2.5, 2.5)

(Note from Fig. 32.10 that the curve is symmetrical about $x = 2.5$ and thus $\overline{x}$ could have been determined 'on sight'.)

Now try the following Practice Exercise

Practice Exercise 145 Centroids (Answers on page 878)

In Problems 1 and 2, find the position of the centroids of the areas bounded by the given curves, the x-axis and the given ordinates.

1. $y = 3x + 2 \quad x = 0, x = 4$
2. $y = 5x^2 \quad x = 1, x = 4$
3. Determine the position of the centroid of a sheet of metal formed by the curve $y = 4x - x^2$ which lies above the x-axis.

4. Find the co-ordinates of the centroid of the area which lies between the curve $y/x = x - 2$ and the x-axis.
5. Sketch the curve $y^2 = 9x$ between the limits $x = 0$ and $x = 4$. Determine the position of the centroid of this area.

32.6 Theorem of Pappus

A theorem of Pappus* states:

'If a plane area is rotated about an axis in its own plane but not intersecting it, the volume of the solid formed is given by the product of the area and the distance moved by the centroid of the area'.

With reference to Fig. 32.11, when the curve $y = f(x)$ is rotated one revolution about the x-axis between the limits $x = a$ and $x = b$, the volume V generated is given by:

volume $V = (A)(2\pi\bar{y})$, from which, $\bar{y} = \dfrac{V}{2\pi A}$

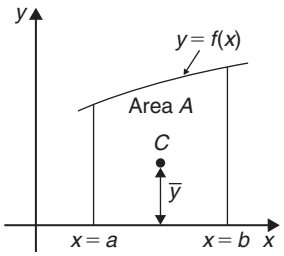

Figure 32.11

Problem 9. (a) Calculate the area bounded by the curve $y = 2x^2$, the x-axis and ordinates $x = 0$ and $x = 3$. (b) If this area is revolved (i) about the x-axis and (ii) about the y-axis, find the volumes of the solids produced. (c) Locate the position of the centroid using (i) integration, and (ii) the theorem of Pappus.

(a) The required area is shown shaded in Fig. 32.12.

$$\text{Area} = \int_0^3 y\,dx = \int_0^3 2x^2\,dx$$
$$= \left[\frac{2x^3}{3}\right]_0^3 = \mathbf{18 \text{ square units}}$$

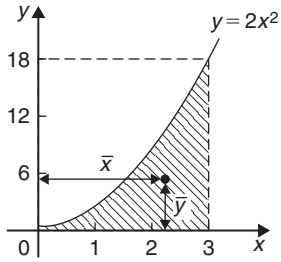

Figure 32.12

(b) (i) When the shaded area of Fig. 32.12 is revolved 360° about the x-axis, the volume generated

$$= \int_0^3 \pi y^2\,dx = \int_0^3 \pi(2x^2)^2\,dx$$
$$= \int_0^3 4\pi x^4\,dx = 4\pi\left[\frac{x^5}{5}\right]_0^3$$
$$= 4\pi\left(\frac{243}{5}\right) = \mathbf{194.4\pi \text{ cubic units}}$$

(ii) When the shaded area of Fig. 32.12 is revolved 360° about the y-axis, the volume generated

$$= (\text{volume generated by } x = 3) - (\text{volume generated by } y = 2x^2)$$
$$= \int_0^{18} \pi(3)^2\,dy - \int_0^{18} \pi\left(\frac{y}{2}\right)dy$$
$$= \pi\int_0^{18}\left(9 - \frac{y}{2}\right)dy = \pi\left[9y - \frac{y^2}{4}\right]_0^{18}$$
$$= \mathbf{81\pi \text{ cubic units}}$$

(c) If the co-ordinates of the centroid of the shaded area in Fig. 32.12 are $(\bar{x}, \bar{y})$ then:

*Who was Pappus? **Pappus of Alexandria** (c. 290–c. 350) was one of the last great Greek mathematicians of Antiquity. *Collection*, his best-known work, is a compendium of mathematics in eight volumes. It covers a wide range of topics, including geometry, recreational mathematics, doubling the cube, polygons and polyhedra. To find out more go to **www.routledge.com/cw/bird**

(i) by integration,

$$\bar{x} = \frac{\int_0^3 xy\,dx}{\int_0^3 y\,dx} = \frac{\int_0^3 x(2x^2)\,dx}{18}$$

$$= \frac{\int_0^3 2x^3\,dx}{18} = \frac{\left[\frac{2x^4}{4}\right]_0^3}{18}$$

$$= \frac{81}{36} = \mathbf{2.25}$$

$$\bar{y} = \frac{\frac{1}{2}\int_0^3 y^2\,dx}{\int_0^3 y\,dx} = \frac{\frac{1}{2}\int_0^3 (2x^2)^2\,dx}{18}$$

$$= \frac{\frac{1}{2}\int_0^3 4x^4\,dx}{18} = \frac{\frac{1}{2}\left[\frac{4x^5}{5}\right]_0^3}{18} = \mathbf{5.4}$$

(ii) using the theorem of Pappus:

Volume generated when shaded area is revolved about OY = (area)$(2\pi\bar{x})$

i.e. $81\pi = (18)(2\pi\bar{x})$

from which, $\bar{x} = \frac{81\pi}{36\pi} = \mathbf{2.25}$

Volume generated when shaded area is revolved about OX = (area)$(2\pi\bar{y})$

i.e. $194.4\pi = (18)(2\pi\bar{y})$

from which, $\bar{y} = \frac{194.4\pi}{36\pi} = \mathbf{5.4}$

Hence the centroid of the shaded area in Fig. 32.12 is at (2.25, 5.4)

Problem 10. A metal disc has a radius of 5.0 cm and is of thickness 2.0 cm. A semicircular groove of diameter 2.0 cm is machined centrally around the rim to form a pulley. Determine, using Pappus' theorem, the volume and mass of metal removed and the volume and mass of the pulley if the density of the metal is 8000 kg m^{-3}

A side view of the rim of the disc is shown in Fig. 32.13.

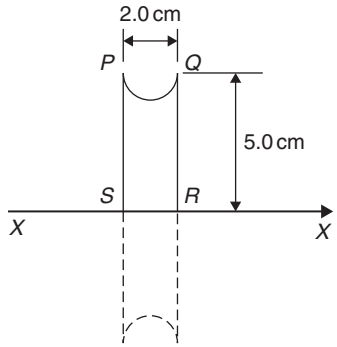

Figure 32.13

When area $PQRS$ is rotated about axis XX the volume generated is that of the pulley. The centroid of the semicircular area removed is at a distance of $\frac{4r}{3\pi}$ from its diameter (see *Engineering Mathematics* 8th edition, Chapter 62), i.e. $\frac{4(1.0)}{3\pi}$, i.e. 0.424 cm from PQ. Thus the distance of the centroid from XX is $5.0 - 0.424$, i.e. 4.576 cm.

The distance moved through in one revolution by the centroid is $2\pi(4.576)$ cm.

Area of semicircle $= \frac{\pi r^2}{2} = \frac{\pi(1.0)^2}{2} = \frac{\pi}{2}$ cm^2

By the theorem of Pappus,

volume generated = area × distance moved by centroid $= \left(\frac{\pi}{2}\right)(2\pi)(4.576)$

i.e. **volume of metal removed = 45.16 cm^3**

Mass of metal removed = density × volume

$$= 8000\,\text{kg m}^{-3} \times \frac{45.16}{10^6}\,\text{m}^3$$

$$= 0.3613\,\text{kg or } 361.3\,\text{g}$$

volume of pulley = volume of cylindrical disc − volume of metal removed

$$= \pi(5.0)^2(2.0) - 45.16$$

$$= \mathbf{111.9\,cm^3}$$

Mass of pulley = density × volume

$$= 8000\,\text{kg m}^{-3} \times \frac{111.9}{10^6}\,\text{m}^3$$

$$= \mathbf{0.8952\,kg} \text{ or } \mathbf{895.2\,g}$$

Now try the following Practice Exercise

Practice Exercise 146 The theorem of Pappus (Answers on page 878)

1. A right-angled isosceles triangle having a hypotenuse of 8 cm is revolved one revolution about one of its equal sides as axis. Determine the volume of the solid generated using Pappus' theorem.
2. Using (a) the theorem of Pappus, and (b) integration, determine the position of the centroid of a metal template in the form of a quadrant of a circle of radius 4 cm. (The equation of a circle, centre 0, radius r is $x^2 + y^2 = r^2$)
3. (a) Determine the area bounded by the curve $y = 5x^2$, the x-axis and the ordinates $x = 0$ and $x = 3$
   (b) If this area is revolved 360° about (i) the x-axis, and (ii) the y-axis, find the volumes of the solids of revolution produced in each case.
   (c) Determine the co-ordinates of the centroid of the area using (i) integral calculus, and (ii) the theorem of Pappus.
4. A metal disc has a radius of 7.0 cm and is of thickness 2.5 cm. A semicircular groove of diameter 2.0 cm is machined centrally around the rim to form a pulley. Determine the volume of metal removed using Pappus' theorem and express this as a percentage of the original volume of the disc. Find also the mass of metal removed if the density of the metal is 7800 kg m^{-3}

For more on areas, mean and rms values, volumes and centroids, see *Engineering Mathematics* 8th edition, Chapters 59 to 63.

32.7 Second moments of area of regular sections

The **first moment of area** about a fixed axis of a lamina of area A, perpendicular distance y from the centroid of the lamina is defined as Ay cubic units. The **second moment of area** of the same lamina as above is given by Ay^2, i.e. the perpendicular distance from the centroid of the area to the fixed axis is squared.

Second moments of areas are usually denoted by I and have units of mm^4, cm^4, and so on.

Radius of gyration

Several areas, $a_1, a_2, a_3, \ldots$ at distances $y_1, y_2, y_3, \ldots$ from a fixed axis, may be replaced by a single area A, where $A = a_1 + a_2 + a_3 + \cdots$ at distance k from the axis, such that $Ak^2 = \sum ay^2$.
k is called the **radius of gyration** of area A about the given axis. Since $Ak^2 = \sum ay^2 = I$ then the radius of gyration,

$$k = \sqrt{\frac{I}{A}}$$

The second moment of area is a quantity much used in the theory of bending of beams, in the torsion of shafts, and in calculations involving water planes and centres of pressure.
The procedure to determine the second moment of area of regular sections about a given axis is (i) to find the second moment of area of a typical element and (ii) to sum all such second moments of area by integrating between appropriate limits.
For example, the second moment of area of the rectangle shown in Fig. 32.14 about axis PP is found by initially considering an elemental strip of width δx, parallel to and distance x from axis PP. Area of shaded strip $= b\delta x$

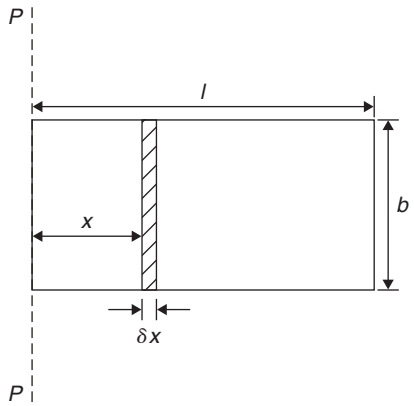

Figure 32.14

Second moment of area of the shaded strip about $PP = (x^2)(b\,\delta x)$
The second moment of area of the whole rectangle about PP is obtained by summing all such strips between $x = 0$ and $x = l$, i.e. $\sum_{x=0}^{x=l} x^2\, b\delta x$

It is a fundamental theorem of integration that

$$\lim_{\delta x \to 0} \sum_{x=0}^{x=l} x^2 b\,\delta x = \int_0^l x^2 b\,\mathrm{d}x$$

Thus the second moment of area of the rectangle about PP

$$= b\int_0^l x^2\,\mathrm{d}x = b\left[\frac{x^3}{3}\right]_0^l = \frac{\boldsymbol{bl^3}}{\boldsymbol{3}}$$

Since the total area of the rectangle, $A = lb$, then

$$I_{pp} = (lb)\left(\frac{l^2}{3}\right) = \frac{\boldsymbol{Al^2}}{\boldsymbol{3}}$$

$$I_{pp} = Ak_{pp}^2 \text{ thus } k_{pp}^2 = \frac{l^2}{3}$$

i.e. the radius of gyration about axes PP,

$$\boldsymbol{k_{pp}} = \sqrt{\frac{l^2}{3}} = \frac{\boldsymbol{l}}{\boldsymbol{\sqrt{3}}}$$

Parallel axis theorem

In Fig. 32.15, axis GG passes through the centroid C of area A. Axes DD and GG are in the same plane, are parallel to each other and distance d apart. The parallel axis theorem states:

$$\boldsymbol{I_{DD} = I_{GG} + Ad^2}$$

Using the parallel axis theorem the second moment of area of a rectangle about an axis through the centroid

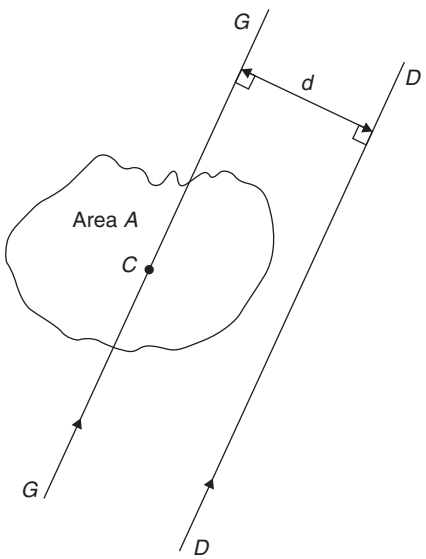

Figure 32.15

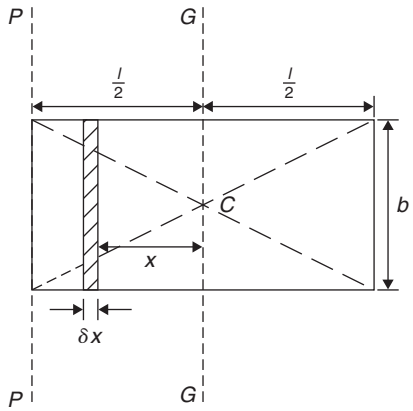

Figure 32.16

may be determined. In the rectangle shown in Fig. 32.16, $I_{pp} = \dfrac{bl^3}{3}$ (from above).

From the parallel axis theorem

$$I_{pp} = I_{GG} + (bl)\left(\frac{1}{2}\right)^2$$

i.e.

$$\frac{bl^3}{3} = I_{GG} + \frac{bl^3}{4}$$

from which, $\boldsymbol{I_{GG}} = \dfrac{bl^3}{3} - \dfrac{bl^3}{4} = \dfrac{\boldsymbol{bl^3}}{\boldsymbol{12}}$

Perpendicular axis theorem

In Fig. 32.17, axes OX, OY and OZ are mutually perpendicular. If OX and OY lie in the plane of area A then the perpendicular axis theorem states:

$$\boldsymbol{I_{OZ} = I_{OX} + I_{OY}}$$

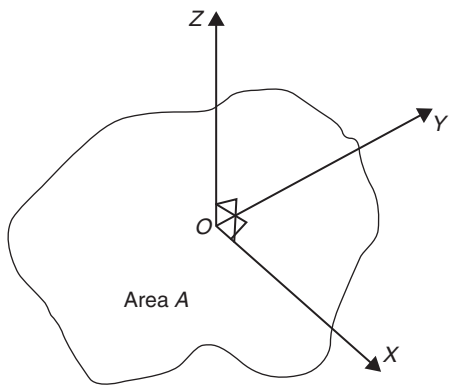

Figure 32.17

A summary of derived standard results for the second moment of area and radius of gyration of regular sections are listed in Table 32.1.

Table 32.1 Summary of standard results of the second moments of areas of regular sections

Shape	Position of axis	Second moment of area, I	Radius of gyration, k
Rectangle length l, breadth b	(1) Coinciding with b	$\frac{bl^3}{3}$	$\frac{l}{\sqrt{3}}$
	(2) Coinciding with l	$\frac{lb^3}{3}$	$\frac{b}{\sqrt{3}}$
	(3) Through centroid, parallel to b	$\frac{bl^3}{12}$	$\frac{l}{\sqrt{12}}$
	(4) Through centroid, parallel to l	$\frac{lb^3}{12}$	$\frac{b}{\sqrt{12}}$
Triangle Perpendicular height h, base b	(1) Coinciding with b	$\frac{bh^3}{12}$	$\frac{h}{\sqrt{6}}$
	(2) Through centroid, parallel to base	$\frac{bh^3}{36}$	$\frac{h}{\sqrt{18}}$
	(3) Through vertex, parallel to base	$\frac{bh^3}{4}$	$\frac{h}{\sqrt{2}}$
Circle radius r	(1) Through centre, perpendicular to plane (i.e. polar axis)	$\frac{\pi r^4}{2}$	$\frac{r}{\sqrt{2}}$
	(2) Coinciding with diameter	$\frac{\pi r^4}{4}$	$\frac{r}{2}$
	(3) About a tangent	$\frac{5\pi r^4}{4}$	$\frac{\sqrt{5}}{2}r$
Semicircle radius r	Coinciding with diameter	$\frac{\pi r^4}{8}$	$\frac{r}{2}$

Problem 11. Determine the second moment of area and the radius of gyration about axes AA, BB and CC for the rectangle shown in Fig. 32.18.

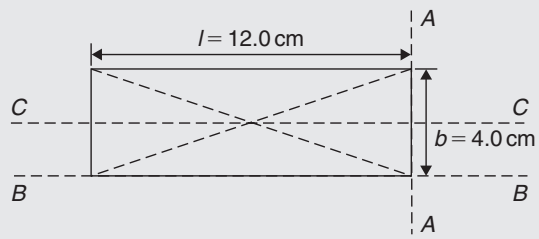

Figure 32.18

From Table 32.1, the second moment of area about axis AA,

$$\boldsymbol{I_{AA}} = \frac{bl^3}{3} = \frac{(4.0)(12.0)^3}{3} = \mathbf{2304\,cm^4}$$

Radius of gyration, $\boldsymbol{k_{AA}} = \frac{l}{\sqrt{3}} = \frac{12.0}{\sqrt{3}} = \mathbf{6.93\,cm}$

Similarly, $\boldsymbol{I_{BB}} = \frac{lb^3}{3} = \frac{(12.0)(4.0)^3}{3} = \mathbf{256\,cm^4}$

and $\boldsymbol{k_{BB}} = \frac{b}{\sqrt{3}} = \frac{4.0}{\sqrt{3}} = \mathbf{2.31\,cm}$

The second moment of area about the centroid of a rectangle is $\frac{bl^3}{12}$ when the axis through the centroid

is parallel with the breadth b. In this case, the axis CC is parallel with the length l.

Hence $\boldsymbol{I_{CC}} = \dfrac{lb^3}{12} = \dfrac{(12.0)(4.0)^3}{12} = \mathbf{64\,cm^4}$

and $\boldsymbol{k_{CC}} = \dfrac{b}{\sqrt{12}} = \dfrac{4.0}{\sqrt{12}} = \mathbf{1.15\,cm}$

Problem 12. Find the second moment of area and the radius of gyration about axis PP for the rectangle shown in Fig. 32.19.

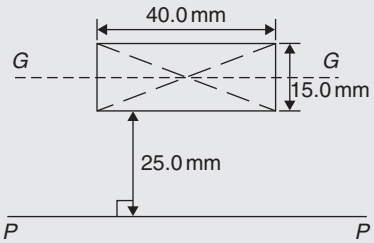

Figure 32.19

$I_{GG} = \dfrac{lb^3}{12}$ where $l = 40.0\,\text{mm}$ and $b = 15.0\,\text{mm}$

Hence $I_{GG} = \dfrac{(40.0)(15.0)^3}{12} = 11\,250\,\text{mm}^4$

From the parallel axis theorem, $I_{PP} = I_{GG} + Ad^2$, where $A = 40.0 \times 15.0 = 600\,\text{mm}^2$ and $d = 25.0 + 7.5 = 32.5\,\text{mm}$, the perpendicular distance between GG and PP. Hence,

$$\boldsymbol{I_{PP}} = 11\,250 + (600)(32.5)^2$$
$$= \mathbf{645\,000\,mm^4}$$

$I_{PP} = Ak_{PP}^2$, from which,

$$\boldsymbol{k_{PP}} = \sqrt{\frac{I_{PP}}{\text{area}}} = \sqrt{\left(\frac{645\,000}{600}\right)} = \mathbf{32.79\,mm}$$

Problem 13. Determine the second moment of area and radius of gyration about axis QQ of the triangle BCD shown in Fig. 32.20.

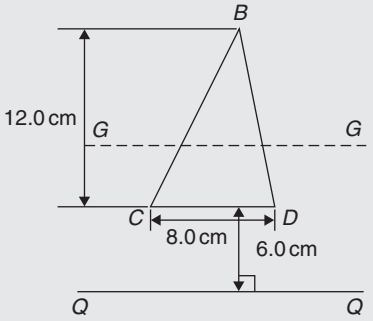

Figure 32.20

Using the parallel axis theorem: $I_{QQ} = I_{GG} + Ad^2$, where I_{GG} is the second moment of area about the centroid of the triangle,

i.e. $\dfrac{bh^3}{36} = \dfrac{(8.0)(12.0)^3}{36} = 384\,\text{cm}^4$,

A is the area of the triangle,

$$= \tfrac{1}{2}bh = \tfrac{1}{2}(8.0)(12.0) = 48\,\text{cm}^2$$

and d is the distance between axes GG and QQ,

$$= 6.0 + \tfrac{1}{3}(12.0) = 10\,\text{cm}$$

Hence the second moment of area about axis QQ,

$$\boldsymbol{I_{QQ}} = 384 + (48)(10)^2 = \mathbf{5184\,cm^4}$$

Radius of gyration,

$$\boldsymbol{k_{QQ}} = \sqrt{\frac{I_{QQ}}{\text{area}}} = \sqrt{\left(\frac{5184}{48}\right)} = \mathbf{10.4\,cm}$$

Problem 14. Determine the second moment of area and radius of gyration of the circle shown in Fig. 32.21 about axis YY.

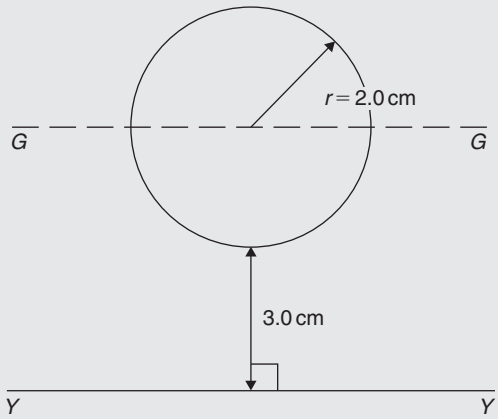

Figure 32.21

In Fig. 32.21, $I_{GG} = \dfrac{\pi r^4}{4} = \dfrac{\pi}{4}(2.0)^4 = 4\pi\,\text{cm}^4$.

Using the parallel axis theorem, $I_{YY} = I_{GG} + Ad^2$, where $d = 3.0 + 2.0 = 5.0\,\text{cm}$.

Hence $\boldsymbol{I_{YY}} = 4\pi + [\pi(2.0)^2](5.0)^2$

$$= 4\pi + 100\pi = 104\pi = \mathbf{327\,cm^4}$$

Radius of gyration,

$$k_{YY} = \sqrt{\frac{I_{YY}}{\text{area}}} = \sqrt{\left(\frac{104\pi}{\pi(2.0)^2}\right)} = \sqrt{26} = \mathbf{5.10\,cm}$$

Problem 15. Determine the second moment of area and radius of gyration for the semicircle shown in Fig. 32.22 about axis XX.

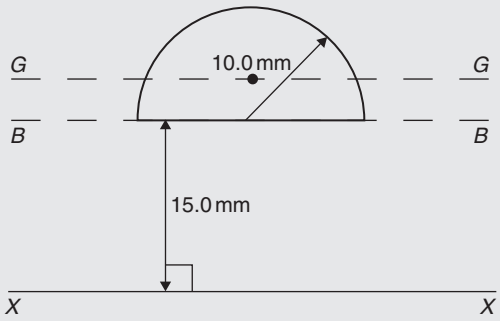

Figure 32.22

The centroid of a semicircle lies at $\frac{4r}{3\pi}$ from its diameter.

Using the parallel axis theorem:

$$I_{BB} = I_{GG} + Ad^2$$

where $I_{BB} = \frac{\pi r^4}{8}$ (from Table 32.1)

$$= \frac{\pi(10.0)^4}{8} = 3927\,\text{mm}^4,$$

$$A = \frac{\pi r^2}{2} = \frac{\pi(10.0)^2}{2} = 157.1\,\text{mm}^2$$

and $d = \frac{4r}{3\pi} = \frac{4(10.0)}{3\pi} = 4.244\,\text{mm}$

Hence $3927 = I_{GG} + (157.1)(4.244)^2$

i.e. $3927 = I_{GG} + 2830$

from which, $I_{GG} = 3927 - 2830 = 1097\,\text{mm}^4$

Using the parallel axis theorem again:

$$I_{XX} = I_{GG} + A(15.0 + 4.244)^2$$

i.e. $I_{XX} = 1097 + (157.1)(19.244)^2$

$= 1097 + 58\,179$

$= 59\,276\,\text{mm}^4$ or $\mathbf{59\,280\,mm^4}$ correct to 4 significant figures.

Radius of gyration, $k_{XX} = \sqrt{\frac{I_{XX}}{\text{area}}} = \sqrt{\left(\frac{59276}{157.1}\right)}$

$= \mathbf{19.42\,mm}$

Problem 16. Determine the polar second moment of area of the propeller shaft cross-section shown in Fig. 32.23.

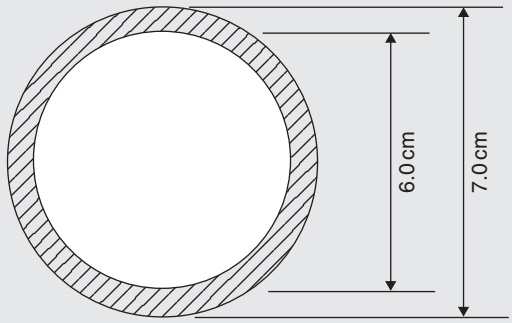

Figure 32.23

The polar second moment of area of a circle $= \frac{\pi r^4}{2}$

The polar second moment of area of the shaded area is given by the polar second moment of area of the 7.0 cm diameter circle minus the polar second moment of area of the 6.0 cm diameter circle.

Hence the polar second moment of area of the cross-section shown

$$= \frac{\pi}{2}\left(\frac{7.0}{2}\right)^4 - \frac{\pi}{2}\left(\frac{6.0}{2}\right)^4$$

$$= 235.7 - 127.2 = \mathbf{108.5\,cm^4}$$

Problem 17. Determine the second moment of area and radius of gyration of a rectangular lamina of length 40 mm and width 15 mm about an axis through one corner, perpendicular to the plane of the lamina.

The lamina is shown in Fig. 32.24.

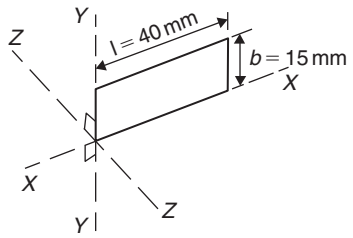

Figure 32.24

From the perpendicular axis theorem:

$$I_{ZZ} = I_{XX} + I_{YY}$$

$$I_{XX} = \frac{lb^3}{3} = \frac{(40)(15)^3}{3} = 45\,000\,\text{mm}^4$$

and $I_{YY} = \dfrac{bl^3}{3} = \dfrac{(15)(40)^3}{3} = 320\,000\,\text{mm}^4$

Hence $\boldsymbol{I_{ZZ}} = 45\,000 + 320\,000$

$= \mathbf{365\,000\,mm^4}$ or $\mathbf{36.5\,cm^4}$

Radius of gyration,

$$k_{ZZ} = \sqrt{\frac{I_{ZZ}}{\text{area}}} = \sqrt{\left(\frac{365\,000}{(40)(15)}\right)}$$

$= \mathbf{24.7\,mm}$ or $\mathbf{2.47\,cm}$

Problem 18. Determine correct to 3 significant figures, the second moment of area about axis XX for the composite area shown in Fig. 32.25.

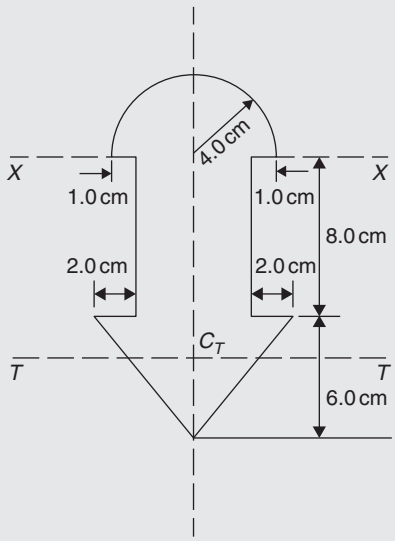

Figure 32.25

For the semicircle,

$$I_{XX} = \frac{\pi r^4}{8} = \frac{\pi(4.0)^4}{8} = 100.5\,\text{cm}^4$$

For the rectangle,

$$I_{XX} = \frac{bl^3}{3} = \frac{(6.0)(8.0)^3}{3} = 1024\,\text{cm}^4$$

For the triangle, about axis TT through centroid C_T,

$$I_{TT} = \frac{bh^3}{36} = \frac{(10)(6.0)^3}{36} = 60\,\text{cm}^4$$

By the parallel axis theorem, the second moment of area of the triangle about axis XX

$= 60 + \left[\frac{1}{2}(10)(6.0)\right]\left[8.0 + \frac{1}{3}(6.0)\right]^2 = 3060\,\text{cm}^4$

Total second moment of area about XX

$= 100.5 + 1024 + 3060$

$= 4184.5$

$= \mathbf{4180\,cm^4}$, correct to 3 significant figures.

Problem 19. Determine the second moment of area and the radius of gyration about axis XX for the I-section shown in Fig. 32.26.

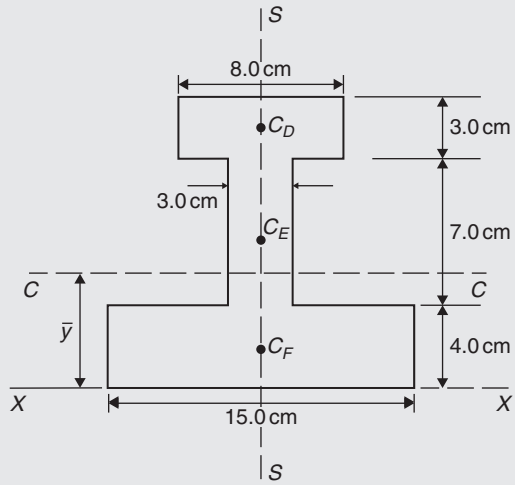

Figure 32.26

The I-section is divided into three rectangles, D, E and F and their centroids denoted by C_D, C_E and C_F respectively.

For rectangle D:
The second moment of area about C_D (an axis through C_D parallel to XX)

$$= \frac{bl^3}{12} = \frac{(8.0)(3.0)^3}{12} = 18\,\text{cm}^4$$

Using the parallel axis theorem:

$$I_{XX} = 18 + Ad^2$$

where $A = (8.0)(3.0) = 24\,\text{cm}^2$ and $d = 12.5\,\text{cm}$

Hence $I_{XX} = 18 + 24(12.5)^2 = 3768\,\text{cm}^4$.

For rectangle E:
The second moment of area about C_E (an axis through C_E parallel to XX)

$$= \frac{bl^3}{12} = \frac{(3.0)(7.0)^3}{12} = 85.75\,\text{cm}^4$$

Using the parallel axis theorem:

$$I_{XX} = 85.75 + (7.0)(3.0)(7.5)^2 = 1267\,\text{cm}^4$$

For rectangle F:

$$I_{XX} = \frac{bl^3}{3} = \frac{(15.0)(4.0)^3}{3} = 320\,\text{cm}^4$$

Total second moment of area for the *I*-section about axis *XX*,

$$I_{XX} = 3768 + 1267 + 320 = \mathbf{5355\,cm^4}$$

Total area of I-section

$$= (8.0)(3.0) + (3.0)(7.0) + (15.0)(4.0)$$
$$= 105\,\text{cm}^2$$

Radius of gyration,

$$k_{XX} = \sqrt{\frac{I_{XX}}{\text{area}}} = \sqrt{\left(\frac{5355}{105}\right)} = \mathbf{7.14\,cm}$$

Now try the following Practice Exercise

Practice Exercise 147 Second moments of areas of regular sections (Answers on page 878)

1. Determine the second moment of area and radius of gyration for the rectangle shown in Fig. 32.27 about (a) axis AA (b) axis BB and (c) axis CC.

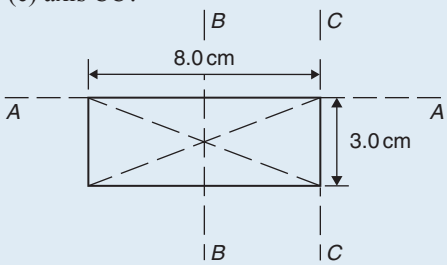

Figure 32.27

2. Determine the second moment of area and radius of gyration for the triangle shown in Fig. 32.28 about (a) axis DD (b) axis EE and (c) an axis through the centroid of the triangle parallel to axis DD.

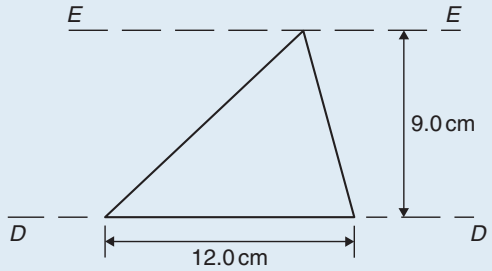

Figure 32.28

3. For the circle shown in Fig. 32.29, find the second moment of area and radius of gyration about (a) axis FF and (b) axis HH.

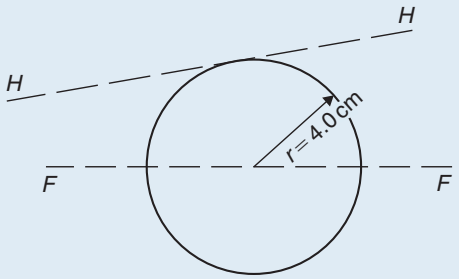

Figure 32.29

4. For the semicircle shown in Fig. 32.30, find the second moment of area and radius of gyration about axis JJ.

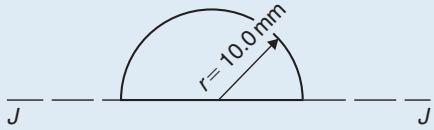

Figure 32.30

5. For each of the areas shown in Fig. 32.31 determine the second moment of area and radius of gyration about axis LL, by using the parallel axis theorem.

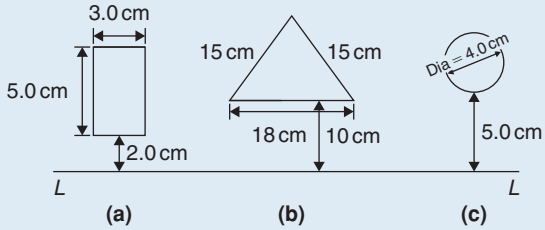

Figure 32.31

6. Calculate the radius of gyration of a rectangular door 2.0 m high by 1.5 m wide about a vertical axis through its hinge.

7. A circular door of a boiler is hinged so that it turns about a tangent. If its diameter is 1.0 m, determine its second moment of area and radius of gyration about the hinge.

8. A circular cover, centre O, has a radius of 12.0 cm. A hole of radius 4.0 cm and centre X, where $OX = 6.0$ cm, is cut in the cover. Determine the second moment of area and the radius of gyration of the remainder about a diameter through O perpendicular to OX.

9. For the sections shown in Fig. 32.32, find the second moment of area and the radius of gyration about axis XX.

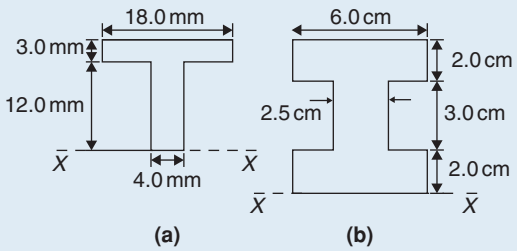

Figure 32.32

10. Determine the second moments of areas about the given axes for the shapes shown in Fig. 32.33. (In Fig. 32.33(b), the circular area is removed.)

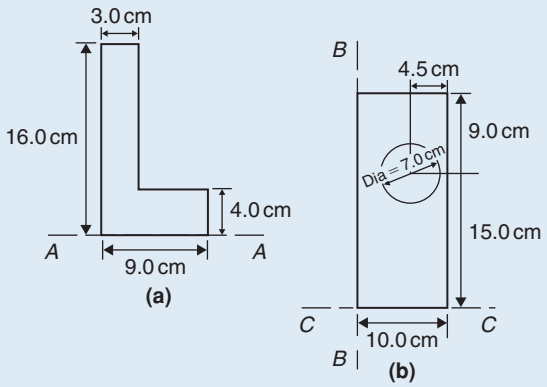

Figure 32.33

11. Find the second moment of area and radius of gyration about the axis XX for the beam section shown in Fig. 32.34.

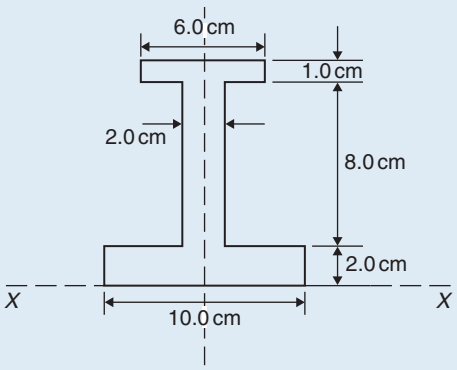

Figure 32.34

For fully worked solutions to each of the problems in Practice Exercises 142 to 147 in this chapter, go to the website:
www.routledge.com/cw/bird

COMPANION @ WEBSITE